DRAWING LIST FOR TEST PACKAGE

H2SO4-503

PROJECT NO.: 22328D

PROJECT TITLE : M15X Ph2 Project

No	PKG No	UNIT	LINE NUMBER			P&ID		REMARK
			ISO DRAWING No	SHEET	REV	P&ID No	REV	
1	503	4FA	25A-H2SO4-ST4-N-6508-01	1 OF 1	0	CJ-M15W14-PR-A20-000145		
2	503	4FA	25A-H2SO4-ST4-N-6509-01	1 OF 1	0	CJ-M15W14-PR-A20-000145		
3	503	4FA	25A-H2SO4-ST4-N-6510-01	1 OF 1	0	CJ-M15W14-PR-A20-000145		
4	503	4FA	25A-H2SO4-ST4-N-6511-01	1 OF 1	0	CJ-M15W14-PR-A20-000145		
5	503	4FA	25A-H2SO4-ST4-N-6512-01	1 OF 1	0	CJ-M15W14-PR-A20-000145		
6	503	4FA	25A-H2SO4-ST4-N-6513-01	1 OF 1	0	CJ-M15W14-PR-A20-000145		
7	503	4FA	25A-H2SO4-ST4-N-6525-01	1 OF 1	0	CJ-M15W14-PR-A20-000144		
8	503	4FA	25A-H2SO4-ST4-N-6526-01	1 OF 1	1	CJ-M15W14-PR-A20-000144		
9	503	4FA	25A-H2SO4-ST4-N-6531-01	1 OF 1	1	CJ-M15W14-PR-A20-000145		
10	503	4FA	25A-H2SO4-ST4-N-6532-01	1 OF 1	0	CJ-M15W14-PR-A20-000145		
11	503	4FA	25A-H2SO4-ST4-N-6534-01	1 OF 1	0	CJ-M15W14-PR-A20-000145		
12	503	4FA	25A-H2SO4-ST4-N-6535-01	1 OF 1	0	CJ-M15W14-PR-A20-000144		
13	503	4FA	25A-H2SO4-ST4-N-6536-01	1 OF 1	0	CJ-M15W14-PR-A20-000144		
14	503	4FA	25A-H2SO4-ST4-N-6537-01	1 OF 1	0	CJ-M15W14-PR-A20-000144		
15	503	4FA	25A-H2SO4-ST4-N-6545-01	1 OF 1	0	CJ-M15W14-PR-A20-000144		
16	503	4FA	25A-H2SO4-ST4-N-6546-01	1 OF 1	0	CJ-M15W14-PR-A20-000144		
17	503	4FA	25A-H2SO4-ST4-N-6547-01	1 OF 1	0	CJ-M15W14-PR-A20-000144		
18	503	4FA	25A-H2SO4-ST4-N-6548-01	1 OF 1	0	CJ-M15W14-PR-A20-000146		
19	503	4FA	25A-H2SO4-ST4-N-6549-01	1 OF 1	0	CJ-M15W14-PR-A20-000146		
20	503	4FA	25A-H2SO4-ST4-N-6550-01	1 OF 1	0	CJ-M15W14-PR-A20-000146		

DRAWING LIST FOR TEST PACKAGE

H2SO4-503

PROJECT NO.: 22328D

PROJECT TITLE : M15X Ph2 Project

No	PKG No	UNIT	LINE NUMBER			P&ID		REMARK
			ISO DRAWING No	SHEET	REV	P&ID No	REV	
21	503	4FA	25A-H2SO4-ST4-N-6564-01	1 OF 1	0	CJ-M15W14-PR-A20-000147		
22	503	4FA	25A-H2SO4-ST4-N-6565-01	1 OF 1	0	CJ-M15W14-PR-A20-000147		
23	503	4FA	25A-H2SO4-ST4-N-6566-01	1 OF 1	0	CJ-M15W14-PR-A20-000147		
24	503	4FA	100A-H2SO4-ST4-N-6505-01	1 OF 1	0	CJ-M15W14-PR-A20-000144		
25	503	4FA	100A-H2SO4-ST4-N-6506-01	1 OF 1	0	CJ-M15W14-PR-A20-000144		
26	503	4FA	100A-H2SO4-ST4-N-6507-01	1 OF 2	0	CJ-M15W14-PR-A20-000144/145/146/147		
27	503	4FA	100A-H2SO4-ST4-N-6507-02	2 OF 2	0	CJ-M15W14-PR-A20-000144/145/146/147		
28	503	4FA	100A-H2SO4-ST4-N-6522-01	1 OF 1	0	CJ-M15W14-PR-A20-000145/146/147		

H2SO4-503

ITEM NO.			W14-T-H2SO4-4602 A/B
SERVICE			H2SO4 STORAGE TANK
Q'TY			2
TYPE			VERTICAL & CYLINDRICAL
SIZE	ID x H	m	3.4 x 4.5 (EH(4,2)) 2A
CAPA.	m3		41 (EH(38)) 2A
MAT'L			FRP + TEFLON

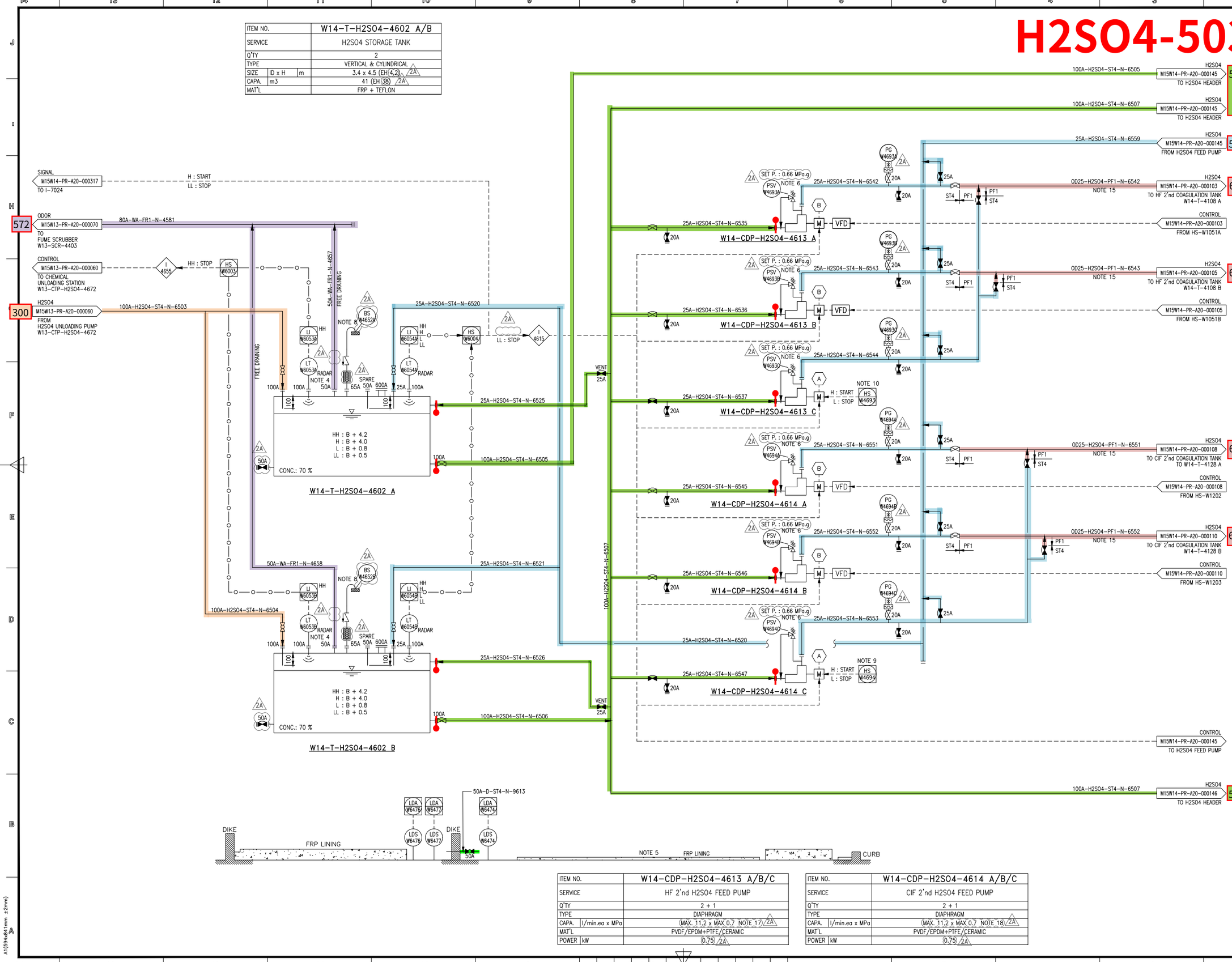

ITEM NO.		W14-CDP-H2SO4-4613 A/B/C
SERVICE		HF 2'nd H2SO4 FEED PUMP
Q'TY		2 + 1
TYPE		DIAPHRAGM
CAPA.	l/min.ea x MPa	(MAX. 11.2 x MAX 0.7 NOTE 17) 2A
MAT'L		PVDF/EPDM+PTFE/CERAMIC
POWER	kW	(0.75) 2A

ITEM NO.		W14-CDP-H2SO4-4614 A/B/C
SERVICE		CIF 2'nd H2SO4 FEED PUMP
Q'TY		2 + 1
TYPE		DIAPHRAGM
CAPA.	l/min.ea x MPa	(MAX. 11.2 x MAX 0.7 NOTE 18) 2A
MAT'L		PVDF/EPDM+PTFE/CERAMIC
POWER	kW	(0.75) 2A

대외비

KEY PLAN (4F)

NOTE

1. 운전 시 CLOSE 되는 배관에는 LOTO 설치.
2. DIAPHRAGM PUMP MAT'L 표기 : HEAD/DIAPHRAGM/CHECK BALL
3. 약품종류에 따라 LINE 색상을 구분하여야 한다.
4. CHEMICAL UNLOADING STATION에서 LEVEL을 볼 수 있도록 한다.
5. CHEMICAL STORAGE TANK & PUMP CURB에서 발생되는 DRAIN은 인근의 TRENCH로 집수되어, DRAIN HEADER로 이송된다.
6. PUMP VENDOR 공급.
7. 황산 LINE에 위치한 VALVE에 LOTO 적용.
8. H2SO4 STORAGE TANK VENT는 DESICCANT (SILICAGEL POT 등)을 설치할 것.
9. HS-W1202, W1203 중 선택운전.
10. HS-W1001A, W1001B 중 선택운전.
11. INTERLOCK NO. I-4655
    (W13-CTP-H2SO4-4672 AUTO STOP)
    : REMOTE STATUS에서 W14-T-H2SO4-4602 A/B LEVEL (LI-W6053A/B) HIGH HIGH STOP.
12. INTERLOCK NO. I-4615
    (W14-CDP-H2SO4-4610 A/B/C,
    W14-CDP-H2SO4-4611 A/B/C,
    W14-CDP-H2SO4-4612 A/B/C,
    W14-CDP-H2SO4-4613 A/B/C,
    W14-CDP-H2SO4-4614 A/B/C,
    W14-CDP-H2SO4-4615 A/B/C,
    W14-CDP-H2SO4-4616 A/B/C,
    W14-CDP-H2SO4-4618 A/B/C,
    W14-CDP-H2SO4-4623 A/B/C AUTO STOP)
    : REMOTE STATUS에서 W14-T-H2SO4-4602 LEVEL (LI-W6054A/B) LOW LOW STOP.
    ALL SPARE PUMP는 pH VALUE LOW STOP.
13. 모든 황산 배관의 LEAK POINT에 대해서는 비산 방지 SHIELD 및 SENSING TAPE 설치할 것.
14. 황산 펌프 AREA에는 비산방지막을 설치한다.
15. PF1 LINE의 CLEAR PVC(이중관)은 40A로 적용.
16. DELETED. 2A
17. OPERATING CAPACITY : 5 LPM
    OPERATING PRESSURE : 0.6 MPa
18. OPERATING CAPACITY : 10 LPM
    OPERATING PRESSURE : 0.6 MPa

수정 REV.	설 명 DESCRIPTION	날 짜 DATE
2A	REVISED AFC	25.08.14
2	REVISED AFC	25.01.17
1	REVISED AFC	24.10.31

제 도 DRAWN BY	이 인 학
검 토 CHECKED BY	한 진 희
승 인 APPROVED BY	박 동 영
제 작 사	SK 에코플랜트
공 사 명 PROJECT TITLE	M15X Ph4 WWT Project
도면명 DWG. TITLE	PIPING & INSTRUMENT DIAGRAM H2SO4 STORAGE TANK & FEED PUMP (1/4)
축 척 SCALE	NONE
날 짜 DATE	2025. 08. 14
PROJECT NO.	22330D
도면번호 SHEET NO.	CJ-M15W14-PR-A20-000144 REV. 2A

A1(594x841mm ±2mm)

C:₩Users₩TOP₩Desktop₩P&ID251013₩[M15X Ph-4 for 인허가]CAD FILE_0910₩CJ-M15W14-PR-A20-000144 R2 P&ID FOR H2SO

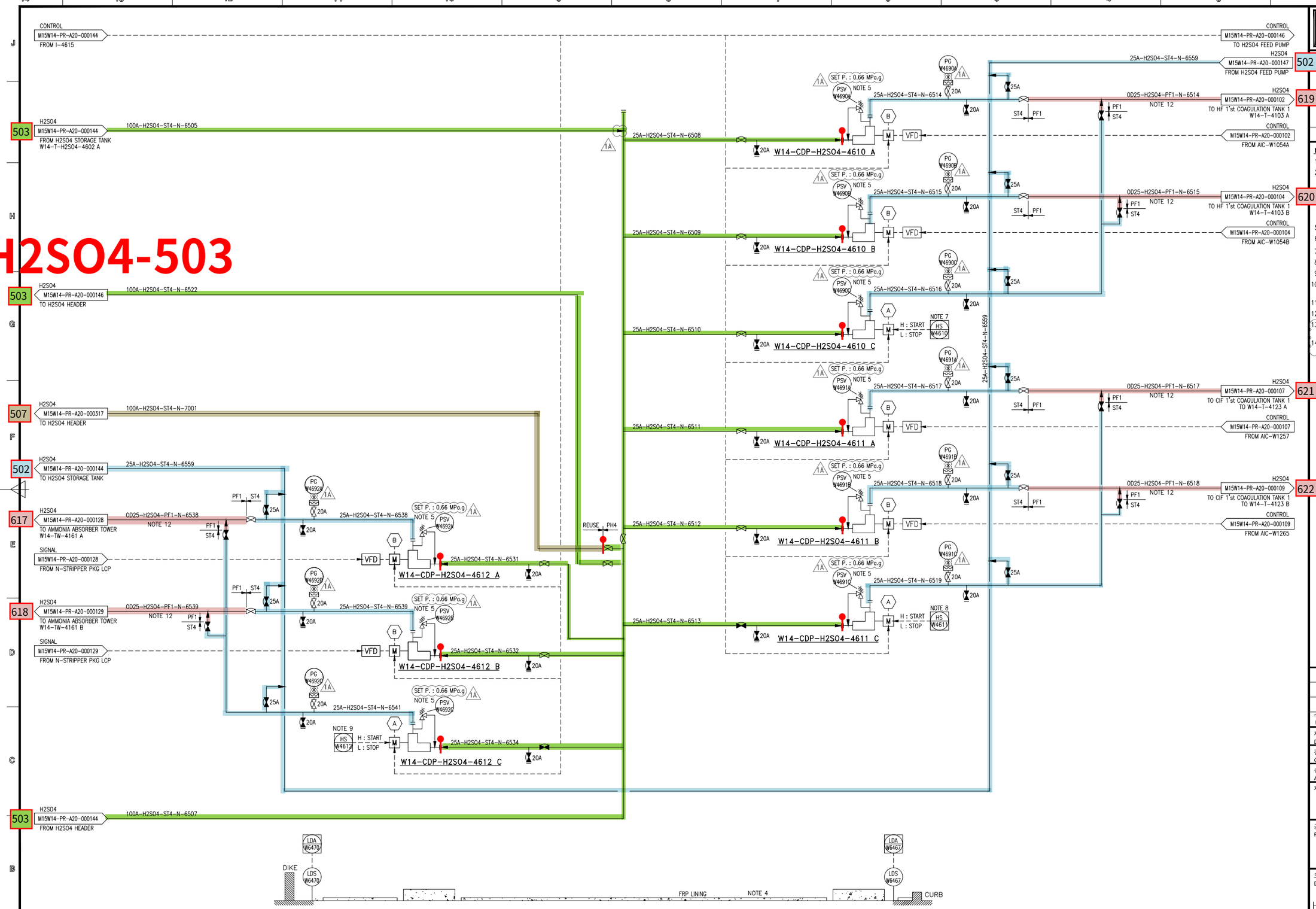

ITEM NO.	W14-CDP-H2SO4-4610 A/B/C
SERVICE	HF 1'st H2SO4 FEED PUMP
Q'TY	2 + 1
TYPE	DIAPHRAGM
CAPA. l/min x MPa	1A (MAX. 11.2 x MAX 0.7 NOTE 13)
MAT'L	PVDF/EPDM+PTFE/CERAMIC
POWER kW	(0.75) 1A

ITEM NO.	W14-CDP-H2SO4-4611 A/B/C
SERVICE	CIF 1'st H2SO4 FEED PUMP
Q'TY	2 + 1
TYPE	DIAPHRAGM
CAPA. l/min x MPa	1A (MAX. 11.2 x MAX 0.7 NOTE 14)
MAT'L	PVDF/EPDM+PTFE/CERAMIC
POWER kW	(0.75) 1A

ITEM NO.	W14-CDP-H2SO4-4612 A/B/C
SERVICE	AMMONIA ABSORBER TOWER H2SO4 FEED PUMP
Q'TY	2 + 1
TYPE	DIAPHRAGM
CAPA. l/min.ea x MPa	1A (MAX. 11.2 x MAX 0.7 NOTE 14)
MAT'L	PVDF/EPDM+PTFE/CERAMIC
POWER kW	(0.75) 1A

대외비

KEY PLAN (4F)

NOTE

1. 온전 시 CLOSE되는 배관에는 LOTO 설치.
2. DIAPHRAGM PUMP MAT'L 표기 : HEAD / DIAPHRAGM/ CHECK BALL 약품종류에 따라 LINE 색상을 구분하여야 한다.
CHEMICAL STORAGE TANK & PUMP CURB에서 발생되는 DRAIN은 인근의 TRENCH로 집수되어, DRAIN HEADER로 이송된다.
5. PUMP VENDOR 공급.
6. 황산 LINE에 위치한 VALVE에 LOTO 적용.
7. AIC-W1054A/B 중 선택운전.
8. AIC-W1257, W1265 중 선택운전.
9. N-STRIPPER PACKAGE TRAIN A/B 중 선택운전.
10. 모든 황산 배관의 LEAK POINT에 대해서는 비산 방지 SHIELD 및 SENSING TAPE 설치할 것.
11. 황산 펌프 AREA에는 비산방지막을 설치한다.
12. PF1 LINE의 CLEAR PVC(이중관)은 40A로 적용.
13. OPERATING CAPACITY : 5 LPM
OPERATING PRESSURE : 0.6 MPa 1A
14. OPERATING CAPACITY : 10 LPM
OPERATING PRESSURE : 0.6 MPa

수정 REV.	설 명 DESCRIPTION	날 짜 DATE
1A	REVISED AFC	25.08.14
1	REVISED AFC	25.01.17
0	APPROVAL FOR CONSTRUCTION	24.09.30

제 도 DRAWN BY	이 인 학
검 토 CHECKED BY	한 진 희
승 인 APPROVED BY	박 동 영
제 작 사	SK 에코플랜트
공 사 명 PROJECT TITLE	M15X Ph4 WWT Project
도면명 DWG. TITLE	PIPING & INSTRUMENT DIAGRAM H2SO4 STORAGE TANK & FEED PUMP (2/4)
축 척 SCALE	NONE
날 짜 DATE	2025. 08. 14
PROJECT NO.	22330D
도면번호 SHEET NO.	CJ-M15W14-PR-A20-000145
REV.	1A

A1(594x841mm ±2mm)

C:₩Users₩TOP₩Desktop₩P&ID251013₩[M15X Ph-4 for 인허가]CAD FILE_0910₩CJ-M15W14-PR-A20-000145 R1 P&ID FOR H2SO

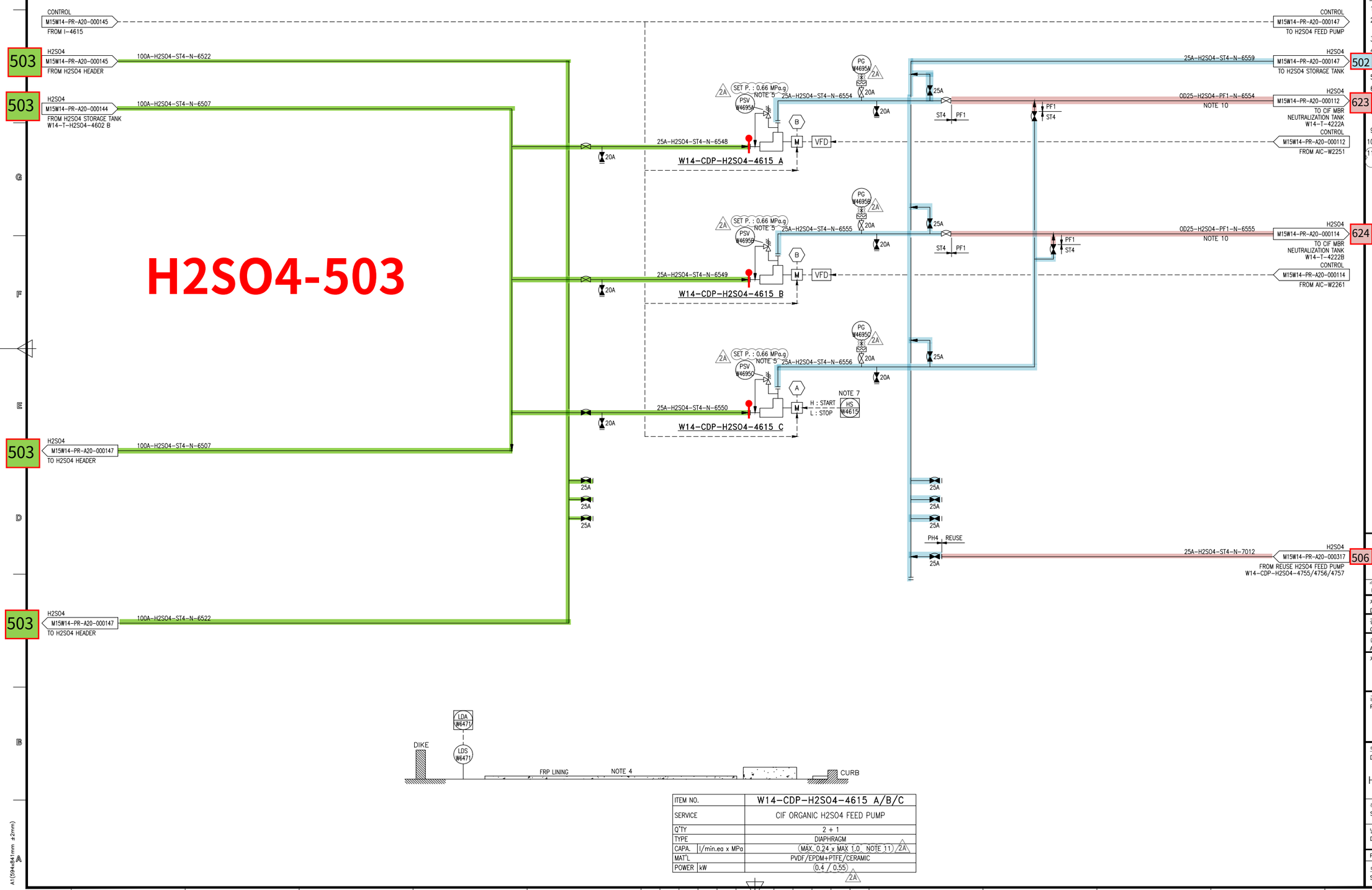

ITEM NO.	W14-CDP-H2SO4-4615 A/B/C
SERVICE	CIF ORGANIC H2SO4 FEED PUMP
Q'TY	2 + 1
TYPE	DIAPHRAGM
CAPA. l/min.ea x MPa	MAX. 0.24 x MAX 1.0 NOTE 11 2A
MAT'L	PVDF/EPDM+PTFE/CERAMIC
POWER kW	0.4 / 0.55 2A

대외비

KEY PLAN (4F)

NOTE

1. 온전 시 CLOSE 되는 배관에는 LOTO 설치.
2. DIAPHRAGM PUMP MAT'L 표기 : HEAD / DIAPHRAGM/ CHECK BALL
3. 약품종류에 따라 LINE 색상을 구분하여야 한다.
4. CHEMICAL STORAGE TANK & PUMP CURB에서 발생되는 DRAIN은 인근의 TRENCH로 집수되어, DRAIN HEADER로 이송된다.
5. PUMP VENDOR 공급.
6. 황산 LINE에 위치한 VALVE에 LOTO 적용.
7. AIC-W2251, W2261 중 선택온전.
8. 모든 황산 배관의 LEAK POINT에 대해서는 비산 방지 SHIELD 및 SENSING TAPE 설치할 것.
9. 황산 펌프 AREA에는 비산방지막을 설치한다.
10. PF1 LINE의 CLEAR PVC(이중관)은 40A로 적용.
11. OPERATING CAPACITY : 0.2 LPM
    OPERATING PRESSURE : 0.6 MPa 2A

수정 REV.	설 명 DESCRIPTION	날 짜 DATE
2A	REVISED AFC	25.08.14
2	REVISED AFC	25.01.17
1	REVISED AFC	24.10.31

제 도 DRAWN BY	이 인 학
검 토 CHECKED BY	한 진 희
승 인 APPROVED BY	박 동 영
제 작 사	SK 에코플랜트
공 사 명 PROJECT TITLE	M15X Ph4 WWT Project
도면명 DWG. TITLE	PIPING & INSTRUMENT DIAGRAM H2SO4 STORAGE TANK & FEED PUMP (3/4)
축 척 SCALE	NONE
날 짜 DATE	2025. 08. 14
PROJECT NO.	22330D
도면번호 SHEET NO.	CJ-M15W14-PR-A20-000146
REV.	2A

A1(594x841mm ±2mm)

C:₩Users₩TOPWDesktop₩P&ID251013₩[M15X Ph-4 for 인허가]CAD FILE_0910₩CJ-M15W14-PR-A20-000146 R2 P&ID FOR H2SO4

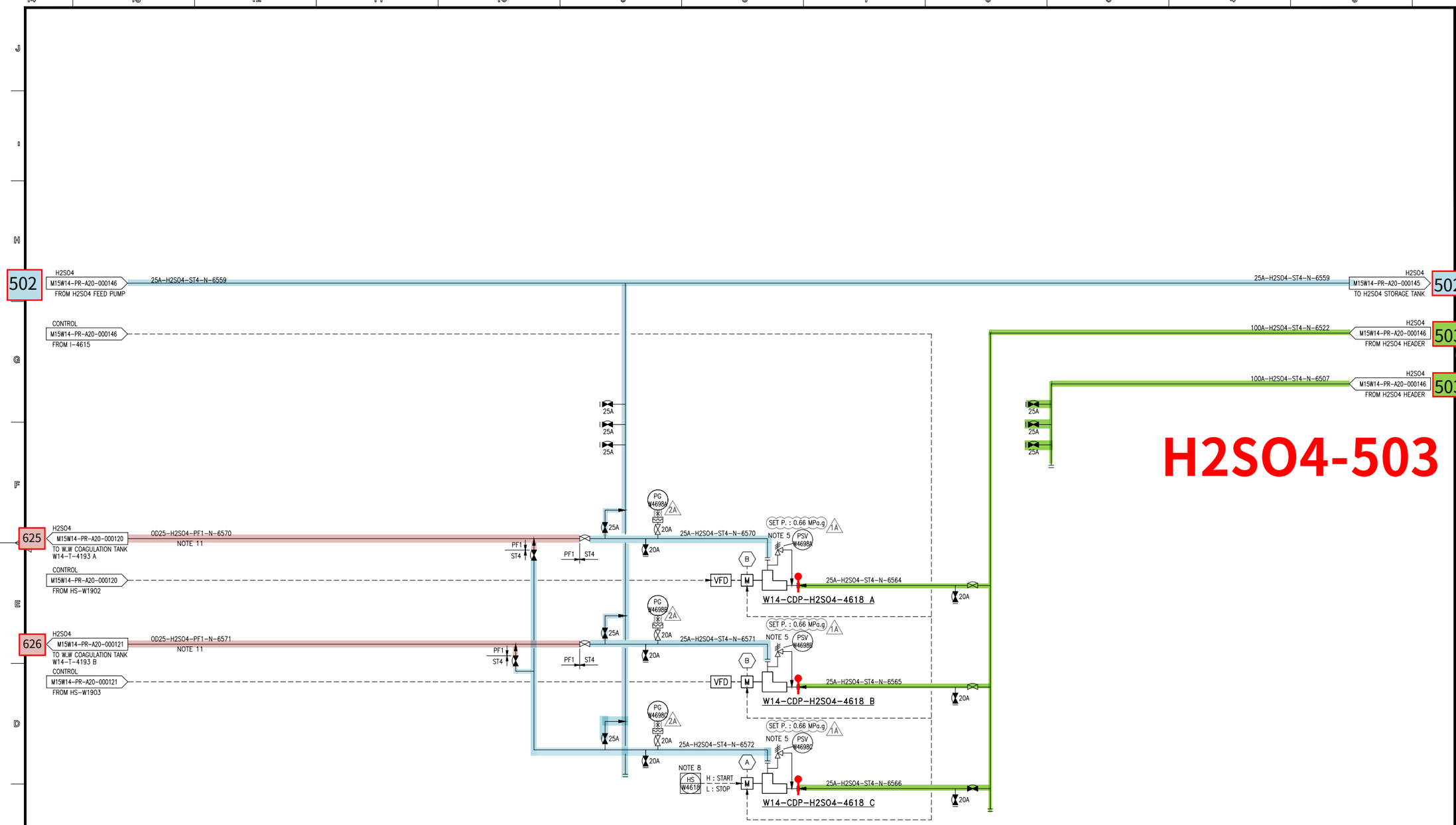

ITEM NO.	W14-CDP-H2SO4-4618 A/B/C
SERVICE	W.W H2SO4 FEED PUMP
Q'TY	2 + 1
TYPE	DIAPHRAGM
CAPA. l/min.ea x MPa	(MAX. 0.52 x MAX 1.0 NOTE 12) 1A
MAT'L	PVDF/EPDM+PTFE/CERAMIC
POWER kW	(0.4 / 0.55) 1A

대외비

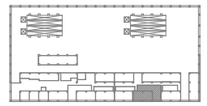

KEY PLAN (4F)

NOTE

1. 운전 시 CLOSE 되는 배관에는 LOTO 설치.
2. DIAPHRAGM PUMP MAT'L 표기 : HEAD / DIAPHRAGM/ CHECK BALL
3. 약품종류에 따라 LINE 색상을 구분하여야 한다.
4. CHEMICAL STORAGE TANK & PUMP CURB에서 발생되는 DRAIN은 인근의 TRENCH로 집수되어, DRAIN HEADER로 이송된다.
5. PUMP VENDOR 공급.
6. 황산 LINE에 위치한 VALVE에 LOTO 적용.
7. AIC-W8062, W8064 중 선택운전.
8. HS-W1902, W1903 중 선택운전.
9. 모든 황산 배관의 LEAK POINT에 대해서는 비산 방지 SHIELD 및 SENSING TAPE 설치할 것.
10. 황산 펌프 AREA에는 비산방지막을 설치한다.
11. PF1 LINE의 CLEAR PVC(이중관)은 40A로 적용.
12. OPERATING CAPACITY : 0.5 LPM
OPERATING PRESSURE : 0.6 MPa 1A

수정 REV.	설명 DESCRIPTION	날짜 DATE
1A	REVISED AFC	25.08.14
1	REVISED AFC	25.01.17
0	APPROVAL FOR CONSTRUCTION	24.09.30

제도 DRAWN BY	이 인 학
검토 CHECKED BY	한 진 희
승인 APPROVED BY	박 동 영
제작사	SK 에코플랜트
공사명 PROJECT TITLE	M15X Ph4 WWT Project
도면명 DWG. TITLE	PIPING & INSTRUMENT DIAGRAM H2SO4 STORAGE TANK & FEED PUMP (4/4)
축척 SCALE	NONE
날짜 DATE	2025. 08. 14
PROJECT NO.	22330D
도면번호 SHEET NO.	CJ-M15W14-PR-A20-000147
REV.	1A

A1(594x841mm ±2mm)

C:WUsersWTOPWDesktopWP&ID251013W[M15X Ph-4 for 인허가]CAD FILE_0910WCJ-M15W14-PR-A20-000147 R1 P&ID FOR H2SO

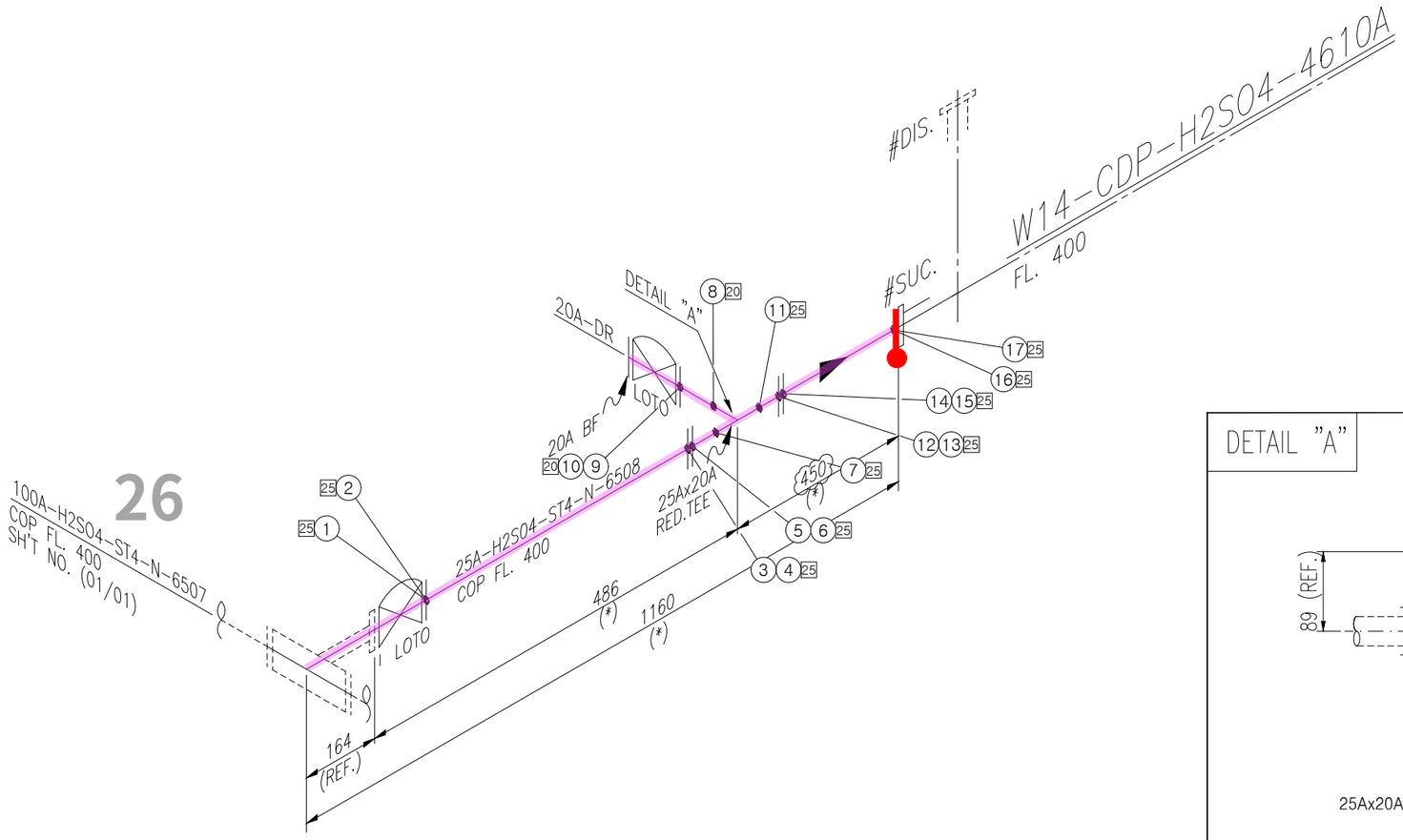

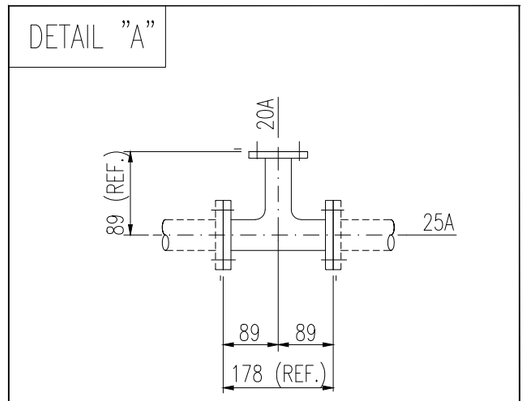

25Ax20A R.TEE W/ PTFE-LINED

상기 25Ax20A R.TEE 는 FLANGE 포함 VENDOR 공급품임.

<NOTE>
1. TRAY & ANGLE,CHANNEL SUPPORT가 적용되는
배관 ELEVATION은 현장 맞춤으로 한다.
2. (*) FIELD ADJUST

ITEM	SIZE	Q'TY	DESCRIPTION
		ST4	
P	25A	0.8M	PIPE, STS 304TP+PTFE Lined, ERW – SCH 10S
TR	25Ax20A	1EA	TEE RED, STSF304+PTFE Lined, ERW – SCH 10S
F	25A	6EA	FLG SO, KS 10K, RF, STS304+PTFE Lined
FB	20A	1EA	FLG BLIND, KS 10K, RF, STS304+PTFE Lined
G	25A	5EA	GASKET, KS 10K, RF, PTFE, 3.0MM TH'K
G	20A	2EA	GASKET, KS 10K, RF, PTFE, 3.0MM TH'K
B1	25A	5SET	MACHINE BOLT & NYLON NUTS :STS 304 / W WASHERS
B1	20A	2SET	MACHINE BOLT & NYLON NUTS :STS 304 / W WASHERS
VDLO	25A	1EA	KS 10K, RF, Teflon Lined SSC13, EPDM + PTFE Diaphrogm, BB, HW
			+LOTO
VDLO	20A	1EA	KS 10K, RF, Teflon Lined SSC13, EPDM + PTFE Diaphrogm, BB, HW
SH	25A	5EA	SHIELD
SH	20A	2EA	SHIELD
F	20A	1EA	FLG SO, KS 10K, RF, STS304+PTFE Lined

* PIPE : P/P1 * 90° ELBOW : E90 * 45° ELBOW : E45 * TEE : T * RED.TEE : TR * STUB-IN : STU * REINFORCING PAD : RP * CON.RED : RC * ECC.RED : RE * CON.SWAGE : RCS/RCS1 * ECC.SWAGE : RES/RES1 * NIPPLE : NP/NP1/NP2 * CAP : CAP/CAP1 * PLUG : PLG * FULL COUPLING : FC * HALF COUPLING : HF/HF1
* STUB-IN : STU * SOCKET(HDPE/PVC) : SC * SADDLE(HDPE) : SD * FLANGE : F/F1 * GASKET : G/G1/G2 * BOLT & NUT : B/B1 * BLIND FLANGE : FB/FB1 * GATE VA. : VG/VG1/VG2 * BALL VA. : VB/VBLO/VB1/VB1LO/VB2/VB2LO * BUTTERFLY VA. : VF/VF4 * CHECK VA. : VC/VC1/VC2/VC3/VC4/VC5/VC6/VC7
* GLOBE VA. : VL/VL1/VL2 * DIAPHRAGM VA. : VD/VDLO * DAMPER : VP * QUICK COUPLING : SQC * FLEXIBLE JOINT(STEEL) : FLXB * FLEXIBLE JOINT(RUBBER) : FLXR * FLEXIBLE JOINT(STEEL_PTFE LINED) : FLXL * FLEXIBLE HOSE : FLXH * STEAM TRAP : ST * SPRAY NOZZLE : SPN * EMERGENCY SHOWER : SSH
* STRAINER(Y-TYPE) : YSTR * STRAINER(T-TYPE) : TSTR * STRAINER(BUCKET-TYPE) : BSTR * ANCHOR PLATE : STOP * BIRD SCREEN : BS * ISOLATION KIT : IK * UNLOADING BOX : UB * AIR TRAP : AT * LOTO : LOTO * SIGHT GLASS : SG * PRESSURE GAUGE : PG * SHILED : SH * SPECIAL BOLT & NUT : BL/BL1

CLIENT SK hynix 1

INSULATION	CODE	N	CONDITION	PRESS. (kg/cm2g)	TEMP. (°C)
	THICK.	–	DESIGN	1.0	60
			OPERATING	ATM	AMB

AREA W14
UNIT 4FA
REF. PLAN DWG. CJ-M15W14-PI-A30-040012-A
REF. P & ID CJ-M15W14-PR-A20-000145

REV. NO.	DATE	DESCRIPTION	BY	CHK	APP'D
0	25.01.24	APPROVED FOR CONSTRUCTION	황래종	안남후	박동영

CONTRACTOR SK ecoplant
PROJECT NAME M15X Ph4 Project
COMMODITY H2S04
JOB NO. 22330D
LINE NO. 25A-H2S04-ST4-N-6508
SH'T NO. 01 / 01
REV. 0

경고 : 본 도면은 SK HYNIX의 기업비밀 자료로서, 어떠한 경우에도 목적 외 사용, 복제, 제3자에게 공개, 누설 및 유출할 수 없으며, 회사는 유포자의 불법 사용으로 피해가 발생할 경우 유포자에게 민/형사상 책임을 요구할 수 있음.

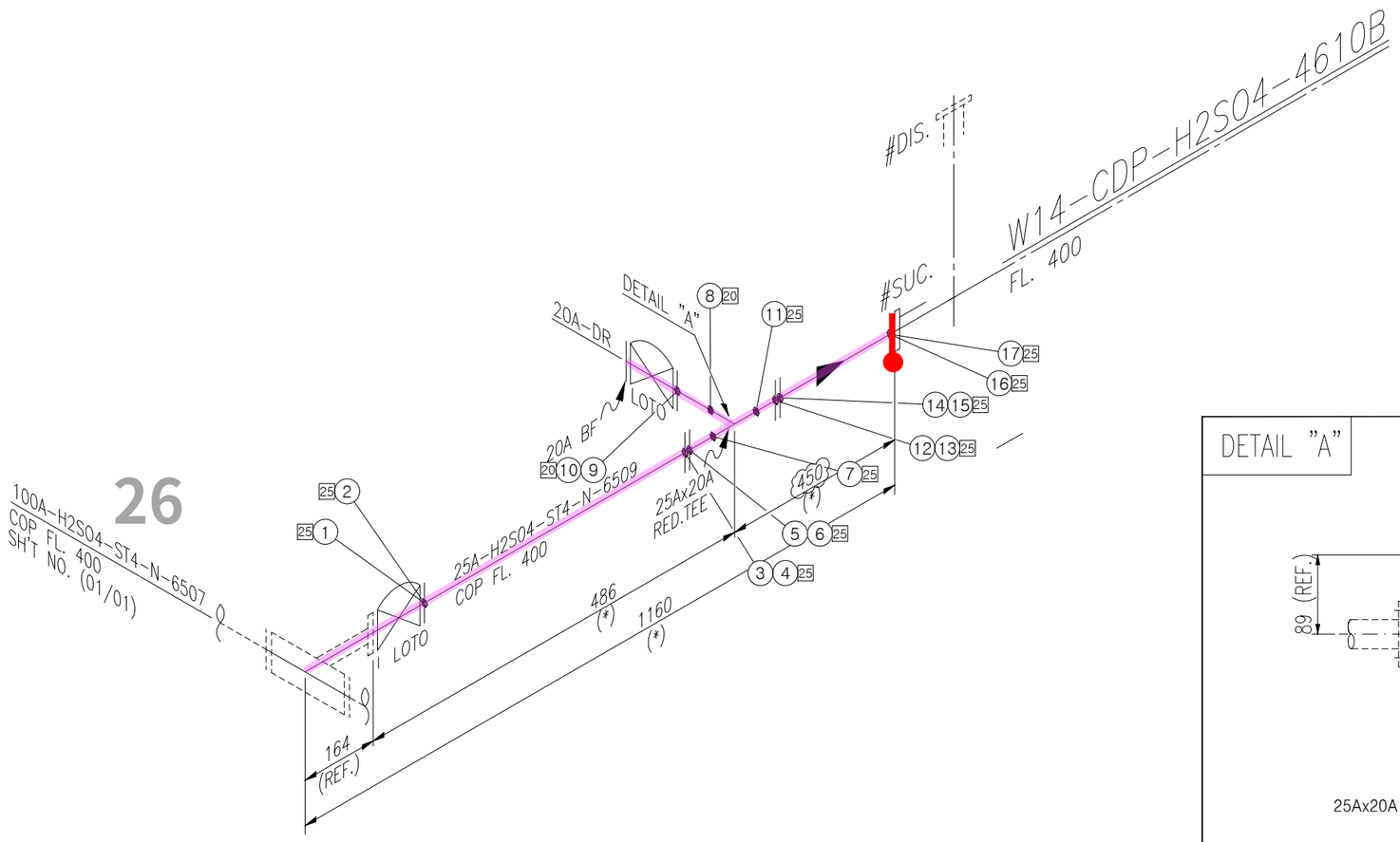

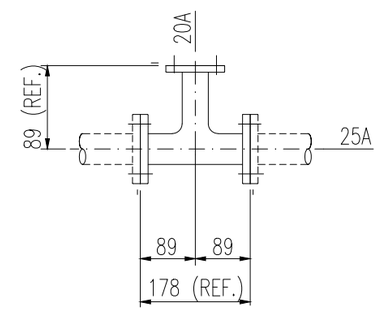

25Ax20A R.TEE W/ PTFE-LINED

상기 25Ax20A R.TEE 는 FLANGE 포함 VENDOR 공급품임.

<NOTE>
1. TRAY & ANGLE,CHANNEL SUPPORT가 적용되는 배관 ELEVATION은 현장 맞춤으로 한다.
2. (*) FIELD ADJUST

SK ecoplant

ITEM	SIZE	Q'TY	DESCRIPTION
		ST4	
P	25A	0.8M	PIPE, STS 304TP+PTFE Lined, ERW – SCH 10S
TR	25Ax20A	1EA	TEE RED, STSF304+PTFE Lined, ERW – SCH 10S
F	25A	6EA	FLG SO, KS 10K, RF, STS304+PTFE Lined
FB	20A	1EA	FLG BLIND, KS 10K, RF, STS304+PTFE Lined
G	25A	5EA	GASKET, KS 10K, RF, PTFE, 3.0MM TH'K
G	20A	2EA	GASKET, KS 10K, RF, PTFE, 3.0MM TH'K
B1	25A	5SET	MACHINE BOLT & NYLON NUTS :STS 304 / W WASHERS
B1	20A	2SET	MACHINE BOLT & NYLON NUTS :STS 304 / W WASHERS
VDLO	25A	1EA	KS 10K, RF, Teflon Lined SSC13, EPDM + PTFE Diaphragm, BB, HW
			+LOTO
VDLO	20A	1EA	KS 10K, RF, Teflon Lined SSC13, EPDM + PTFE Diaphragm, BB, HW
SH	25A	5EA	SHIELD
SH	20A	2EA	SHIELD
F	20A	1EA	FLG SO, KS 10K, RF, STS304+PTFE Lined

* PIPE : P/P1 * 90° ELBOW : E90 * 45° ELBOW : E45 * TEE : T * RED.TEE : TR * STUB-IN : STU * REINFORCING PAD : RP * CON.RED : RC * ECC.RED : RE * CON.SWAGE : RCS/RCS1 * ECC.SWAGE : RES/RES1 * NIPPLE : NP/NP1/NP2 * CAP : CAP/CAP1 * PLUG : PLG * FULL COUPLING : FC * HALF COUPLING : HF/HF1
* STUB-IN : STU * SOCKET(HDPE/PVC) : SC * SADDLE(HDPE) : SD * FLANGE : F/F1 * GASKET : G/G1/G2 * BOLT & NUT : B/B1 * BLIND FLANGE : FB/FB1 * GATE VA. : VG/VG1/VG2 * BALL VA. : VB/VBLO/VB1/VB1LO/VB2/VB2LO * BUTTERFLY VA. : VF/VF4 * CHECK VA. : VC/VC1/VC2/VC3/VC4/VC5/VC6/VC7
* GLOBE VA. : VL/VL1/VL2 * DIAPHRAGM VA. : VD/VDLO * DAMPER : VP * QUICK COUPLING : SQC * FLEXIBLE JOINT(STEEL) : FLXB * FLEXIBLE JOINT(RUBBER) : FLXR * FLEXIBLE JOINT(STEEL_PTFE LINED) : FLXL * FLEXIBLE HOSE : FLXH * STEAM TRAP : ST * SPRAY NOZZLE : SPN * EMERGENCY SHOWER : SSH
* STRAINER(Y-TYPE) : YSTR * STRAINER(T-TYPE) : TSTR * STRAINER(BUCKET-TYPE) : BSTR * ANCHOR PLATE : STOP * BIRD SCREEN : BS * ISOLATION KIT : IK * UNLOADING BOX : UB * AIR TRAP : AT * LOTO : LOTO * SIGHT GLASS : SG * PRESSURE GAUGE : PG * SHILED : SH * SPECIAL BOLT & NUT : BL/BL1

CLIENT SK hynix 2

INSULATION	CODE	N	CONDITION	PRESS. (kg/cm2g)	TEMP. (°C)
	THICK.	–	DESIGN	1.0	60
			OPERATING	ATM	AMB

AREA W14
UNIT 4FA
REF. PLAN DWG. CJ-M15W14-PI-A30-040012-A
REF. P & ID CJ-M15W14-PR-A20-000145

REV. NO.	DATE	DESCRIPTION	BY	CHK	APP'D
0	25.01.24	APPROVED FOR CONSTRUCTION	황래종	안남후	박동영

CONTRACTOR SK ecoplant
PROJECT NAME M15X Ph4 Project
COMMODITY H2SO4
JOB NO. 22330D
LINE NO. 25A-H2SO4-ST4-N-6509
SH'T NO. 01 / 01
REV. 0

경고 : 본 도면은 SK HYNIX의 기업비밀 자료로서, 어떠한 경우에도 목적 외 사용, 복제, 제3자에게 공개, 누설 및 유출할 수 없으며, 회사는 유포자의 불법 사용으로 피해가 발생할 경우 유포자에게 민/형사상 책임을 요구할 수 있음.

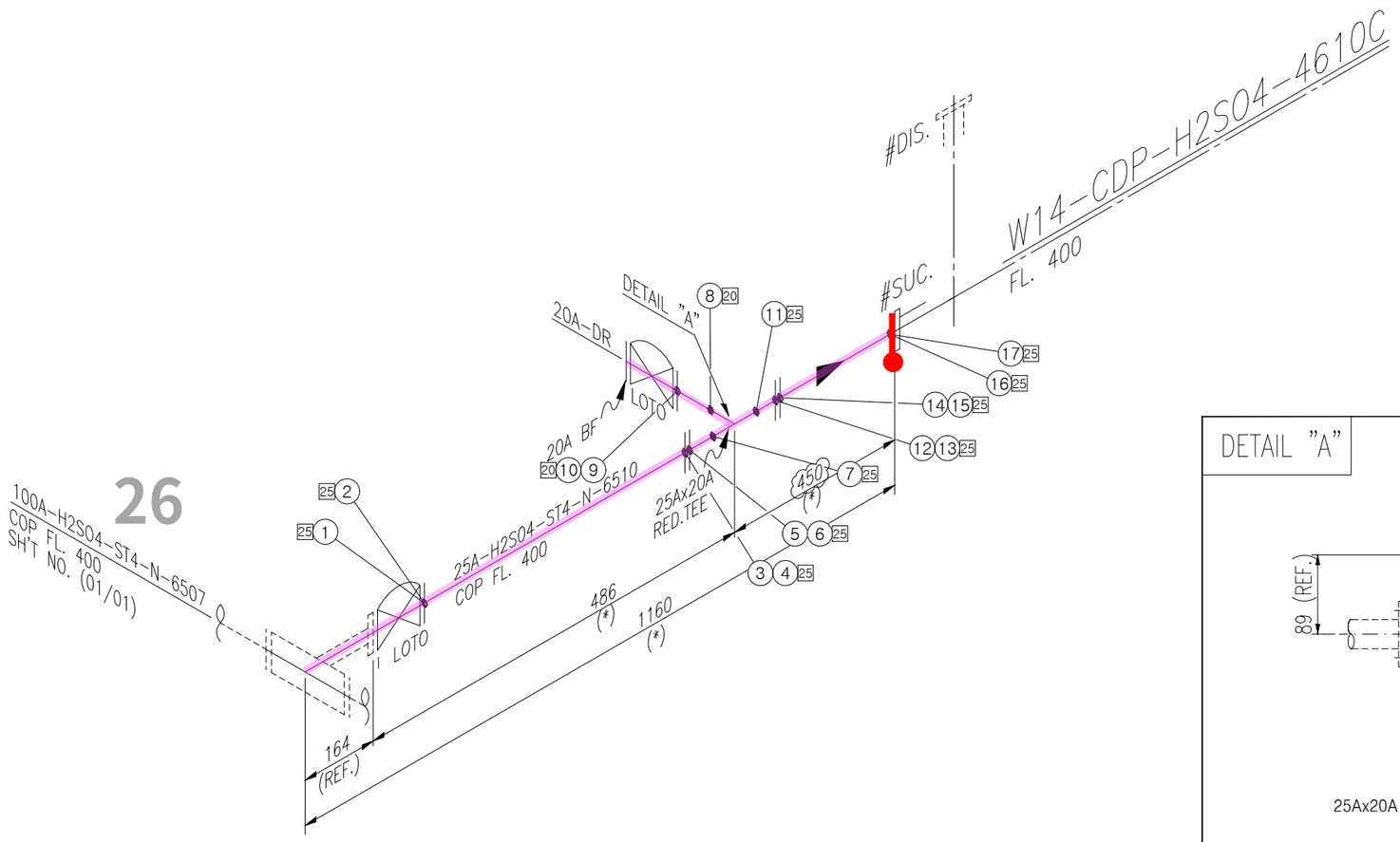

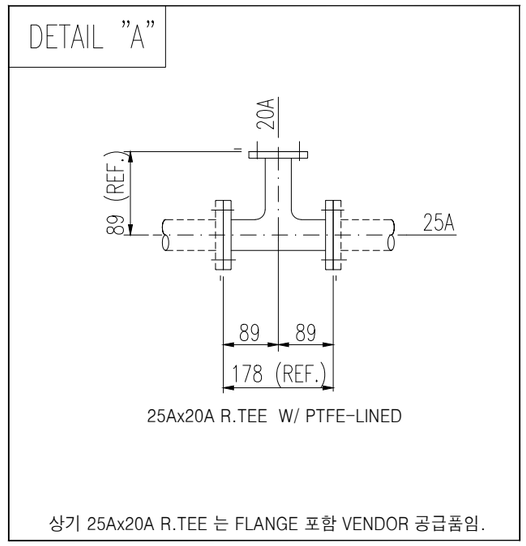

<NOTE>
1. TRAY & ANGLE,CHANNEL SUPPORT가 적용되는 배관 ELEVATION은 현장 맞춤으로 한다.
2. (*) FIELD ADJUST

SK ecoplant

ITEM	SIZE	Q'TY	DESCRIPTION
		ST4	
P	25A	0.8M	PIPE, STS 304TP+PTFE Lined, ERW – SCH 10S
TR	25Ax20A	1EA	TEE RED, STSF304+PTFE Lined, ERW – SCH 10S
F	25A	6EA	FLG SO, KS 10K, RF, STS304+PTFE Lined
FB	20A	1EA	FLG BLIND, KS 10K, RF, STS304+PTFE Lined
G	25A	5EA	GASKET, KS 10K, RF, PTFE, 3.0MM TH'K
G	20A	2EA	GASKET, KS 10K, RF, PTFE, 3.0MM TH'K
B1	25A	5SET	MACHINE BOLT & NYLON NUTS :STS 304 / W WASHERS
B1	20A	2SET	MACHINE BOLT & NYLON NUTS :STS 304 / W WASHERS
VDLO	25A	1EA	KS 10K, RF, Teflon Lined SSC13, EPDM + PTFE Diaphrogm, BB, HW
			+LOTO
VDLO	20A	1EA	KS 10K, RF, Teflon Lined SSC13, EPDM + PTFE Diaphrogm, BB, HW
SH	25A	5EA	SHIELD
SH	20A	2EA	SHIELD
F	20A	1EA	FLG SO, KS 10K, RF, STS304+PTFE Lined

* PIPE : P/P1 * 90° ELBOW : E90 * 45° ELBOW : E45 * TEE : T * RED.TEE : TR * STUB-IN : STU * REINFORCING PAD : RP * CON.RED : RC * ECC.RED : RE * CON.SWAGE : RCS/RCS1 * ECC.SWAGE : RES/RES1 * NIPPLE : NP/NP1/NP2 * CAP : CAP/CAP1 * PLUG : PLG * FULL COUPLING : FC * HALF COUPLING : HF/HF1
* STUB-IN : STU * SOCKET(HDPE/PVC) : SC * SADDLE(HDPE) : SD * FLANGE : F/F1 * GASKET : G/G1/G2 * BOLT & NUT : B/B1 * BLIND FLANGE : FB/FB1 * GATE VA. : VG/VG1/VG2 * BALL VA. : VB/VBLO/VB1/VB1LO/VB2/VB2LO * BUTTERFLY VA. : VF/VF4 * CHECK VA. : VC/VC1/VC2/VC3/VC4/VC5/VC6/VC7
* GLOBE VA. : VL/VL1/VL2 * DIAPHRAGM VA. : VD/VDLO * DAMPER : VP * QUICK COUPLING : SQC * FLEXIBLE JOINT(STEEL) : FLXB * FLEXIBLE JOINT(RUBBER) : FLXR * FLEXIBLE JOINT(STEEL_PTFE LINED) : FLXL * FLEXIBLE HOSE : FLXH * STEAM TRAP : ST * SPRAY NOZZLE : SPN * EMERGENCY SHOWER : SSH
* STRAINER(Y-TYPE) : YSTR * STRAINER(T-TYPE) : TSTR * STRAINER(BUCKET-TYPE) : BSTR * ANCHOR PLATE : STOP * BIRD SCREEN : BS * ISOLATION KIT : IK * UNLOADING BOX : UB * AIR TRAP : AT * LOTO : LOTO * SIGHT GLASS : SG * PRESSURE GAUGE : PG * SHILED : SH * SPECIAL BOLT & NUT : BL/BL1

CLIENT SK hynix 3

INSULATION	CODE	N	CONDITION	PRESS. (kg/cm2g)	TEMP. (°C)
	THICK.	–	DESIGN	1.0	60
			OPERATING	ATM	AMB

AREA W14
UNIT 4FA
REF. PLAN DWG. CJ-M15W14-PI-A30-040012-A
REF. P & ID CJ-M15W14-PR-A20-000145

REV. NO.	DATE	DESCRIPTION	BY	CHK	APP'D
0	25.01.24	APPROVED FOR CONSTRUCTION	황래종	안남후	박동영

CONTRACTOR SK ecoplant
PROJECT NAME M15X Ph4 Project
COMMODITY H2S04
JOB NO. 22330D
LINE NO. 25A-H2S04-ST4-N-6510
SH'T NO. 01 / 01
REV. 0

경고 : 본 도면은 SK HYNIX의 기업비밀 자료로서, 어떠한 경우에도 목적 외 사용, 복제, 제3자에게 공개, 누설 및 유출할 수 없으며, 회사는 유포자의 불법 사용으로 피해가 발생할 경우 유포자에게 민/형사상 책임을 요구할 수 있음.

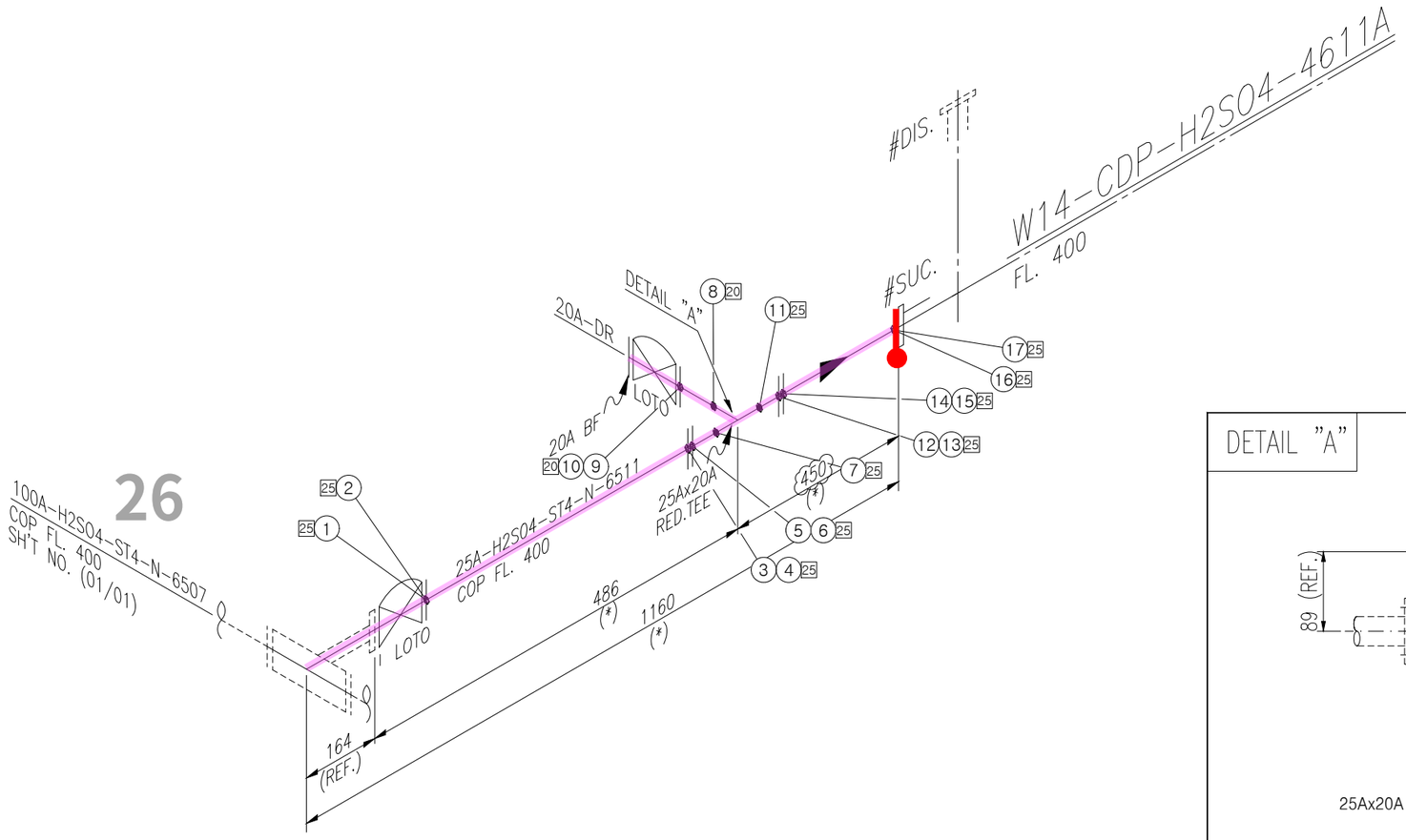

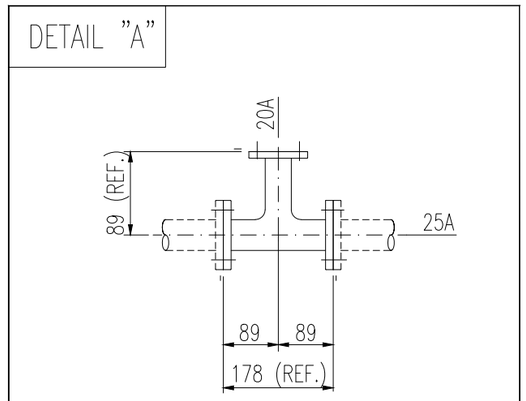

25Ax20A R.TEE W/ PTFE-LINED

상기 25Ax20A R.TEE 는 FLANGE 포함 VENDOR 공급품임.

<NOTE>
1. TRAY & ANGLE,CHANNEL SUPPORT가 적용되는 배관 ELEVATION은 현장 맞춤으로 한다.
2. (*) FIELD ADJUST

ITEM	SIZE	Q'TY	DESCRIPTION
		ST4	
P	25A	0.8M	PIPE, STS 304TP+PTFE Lined, ERW – SCH 10S
TR	25Ax20A	1EA	TEE RED, STSF304+PTFE Lined, ERW – SCH 10S
F	25A	6EA	FLG SO, KS 10K, RF, STS304+PTFE Lined
FB	20A	1EA	FLG BLIND, KS 10K, RF, STS304+PTFE Lined
G	25A	5EA	GASKET, KS 10K, RF, PTFE, 3.0MM TH'K
G	20A	2EA	GASKET, KS 10K, RF, PTFE, 3.0MM TH'K
B1	25A	5SET	MACHINE BOLT & NYLON NUTS :STS 304 / W WASHERS
B1	20A	2SET	MACHINE BOLT & NYLON NUTS :STS 304 / W WASHERS
VDLO	25A	1EA	KS 10K, RF, Teflon Lined SSC13, EPDM + PTFE Diaphrogm, BB, HW
			+LOTO
VDLO	20A	1EA	KS 10K, RF, Teflon Lined SSC13, EPDM + PTFE Diaphrogm, BB, HW
SH	25A	5EA	SHIELD
SH	20A	2EA	SHIELD
F	20A	1EA	FLG SO, KS 10K, RF, STS304+PTFE Lined

* PIPE : P/P1 * 90° ELBOW : E90 * 45° ELBOW : E45 * TEE : T * RED.TEE : TR * STUB-IN : STU * REINFORCING PAD : RP * CON.RED : RC * ECC.RED : RE * CON.SWAGE : RCS/RCS1 * ECC.SWAGE : RES/RES1 * NIPPLE : NP/NP1/NP2 * CAP : CAP/CAP1 * PLUG : PLG * FULL COUPLING : FC * HALF COUPLING : HF/HF1
* STUB-IN : STU * SOCKET(HDPE/PVC) : SC * SADDLE(HDPE) : SD * FLANGE : F/F1 * GASKET : G/G1/G2 * BOLT & NUT : B/B1 * BLIND FLANGE : FB/FB1 * GATE VA. : VG/VG1/VG2 * BALL VA. : VB/VBL0/VB1/VB1L0/VB2/VB2L0 * BUTTERFLY VA. : VF/VF4 * CHECK VA. : VC/VC1/VC2/VC3/VC4/VC5/VC6/VC7
* GLOBE VA. : VL/VL1/VL2 * DIAPHRAGM VA. : VD/VDLO * DAMPER : VP * QUICK COUPLING : SQC * FLEXIBLE JOINT(STEEL) : FLXB * FLEXIBLE JOINT(RUBBER) : FLXR * FLEXIBLE JOINT(STEEL_PTFE LINED) : FLXL * FLEXIBLE HOSE : FLXH * STEAM TRAP : ST * SPRAY NOZZLE : SPN * EMERGENCY SHOWER : SSH
* STRAINER(Y-TYPE) : YSTR * STRAINER(T-TYPE) : TSTR * STRAINER(BUCKET-TYPE) : BSTR * ANCHOR PLATE : STOP * BIRD SCREEN : BS * ISOLATION KIT : IK * UNLOADING BOX : UB * AIR TRAP : AT * LOTO : LOTO * SIGHT GLASS : SG * PRESSURE GAUGE : PG * SHILED : SH * SPECIAL BOLT & NUT : BL/BL1

CLIENT SK hynix 4

INSULATION	CODE	N	CONDITION	PRESS. (kg/cm2g)	TEMP. (°C)
	THICK.	–	DESIGN	1.0	60
			OPERATING	ATM	AMB

AREA W14
UNIT 4FA
REF. PLAN DWG. CJ-M15W14-PI-A30-040013-A
REF. P & ID CJ-M15W14-PR-A20-000145

REV. NO.	DATE	DESCRIPTION	BY	CHK	APP'D
0	25.01.24	APPROVED FOR CONSTRUCTION	황래종	안남후	박동영

CONTRACTOR SK ecoplant
PROJECT NAME M15X Ph4 Project
COMMODITY H2S04
JOB NO. 22330D
LINE NO. 25A-H2S04-ST4-N-6511
SH'T NO. 01 / 01
REV. 0

경고 : 본 도면은 SK HYNIX의 기업비밀 자료로서, 어떠한 경우에도 목적 외 사용, 복제, 제3자에게 공개, 누설 및 유출할 수 없으며, 회사는 유포자의 불법 사용으로 피해가 발생할 경우 유포자에게 민/형사상 책임을 요구할 수 있음.

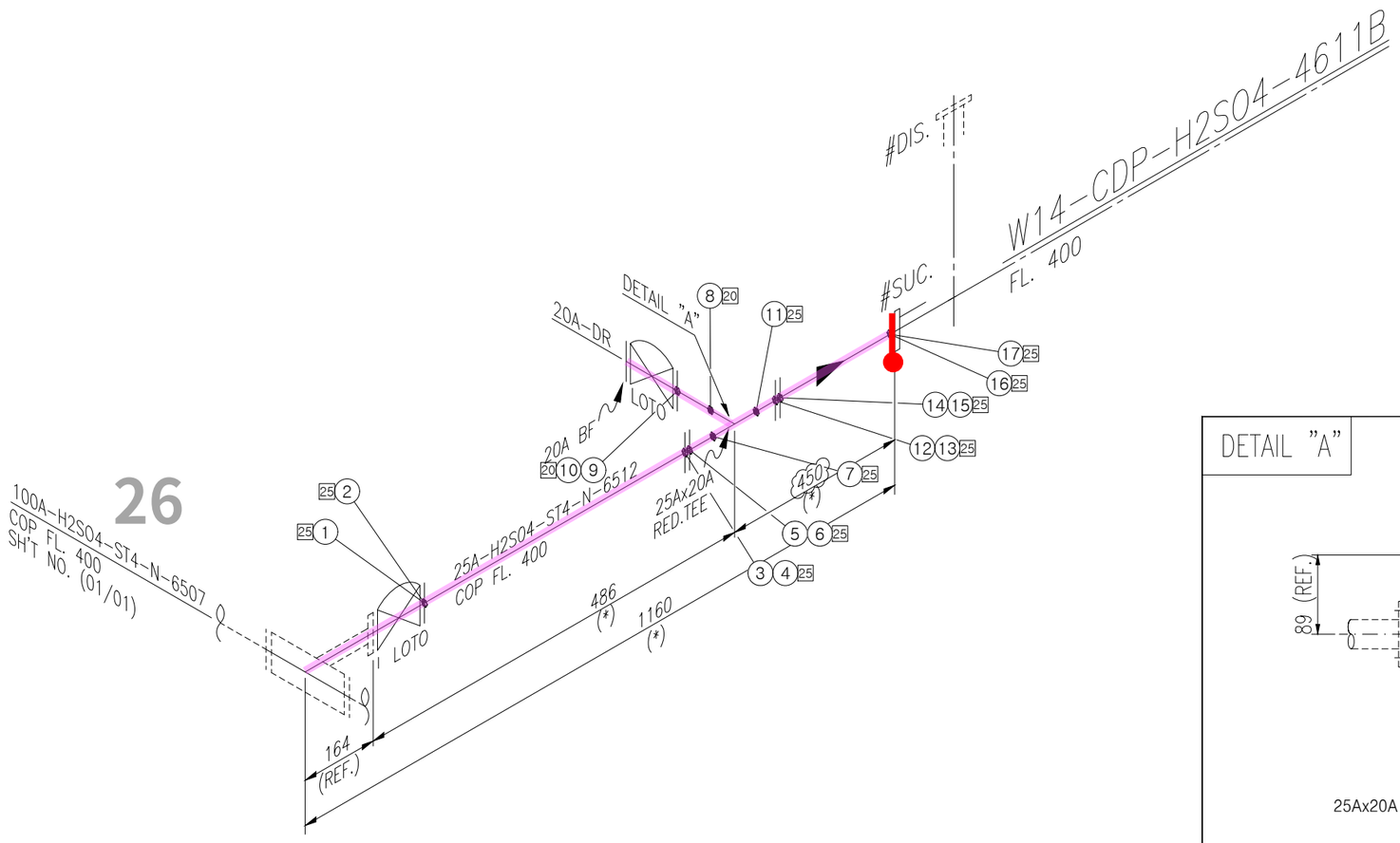

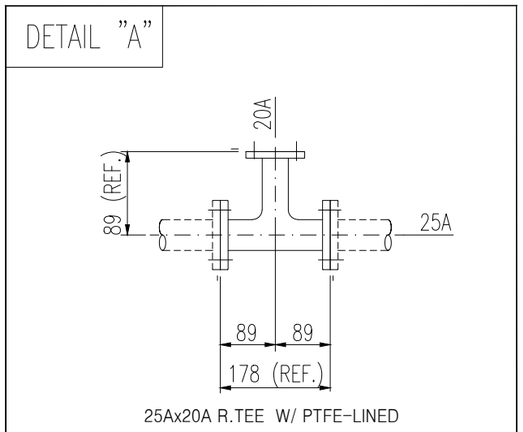

상기 25Ax20A R.TEE 는 FLANGE 포함 VENDOR 공급품임.

<NOTE>
1. TRAY & ANGLE,CHANNEL SUPPORT가 적용되는 배관 ELEVATION은 현장 맞춤으로 한다.
2. (*) FIELD ADJUST

SK ecoplant

ITEM	SIZE	Q'TY	DESCRIPTION
		ST4	
P	25A	0.8M	PIPE, STS 304TP+PTFE Lined, ERW – SCH 10S
TR	25Ax20A	1EA	TEE RED, STSF304+PTFE Lined, ERW – SCH 10S
F	25A	6EA	FLG SO, KS 10K, RF, STS304+PTFE Lined
FB	20A	1EA	FLG BLIND, KS 10K, RF, STS304+PTFE Lined
G	25A	5EA	GASKET, KS 10K, RF, PTFE, 3.0MM TH'K
G	20A	2EA	GASKET, KS 10K, RF, PTFE, 3.0MM TH'K
B1	25A	5SET	MACHINE BOLT & NYLON NUTS :STS 304 / W WASHERS
B1	20A	2SET	MACHINE BOLT & NYLON NUTS :STS 304 / W WASHERS
VDLO	25A	1EA	KS 10K, RF, Teflon Lined SSC13, EPDM + PTFE Diaphrogm, BB, HW
			+LOTO
VDLO	20A	1EA	KS 10K, RF, Teflon Lined SSC13, EPDM + PTFE Diaphrogm, BB, HW
SH	25A	5EA	SHIELD
SH	20A	2EA	SHIELD
F	20A	1EA	FLG SO, KS 10K, RF, STS304+PTFE Lined

* PIPE : P/P1 * 90° ELBOW : E90 * 45° ELBOW : E45 * TEE : T * RED.TEE : TR * STUB-IN : STU * REINFORCING PAD : RP * CON.RED : RC * ECC.RED : RE * CON.SWAGE : RCS/RCS1 * ECC.SWAGE : RES/RES1 * NIPPLE : NP/NP1/NP2 * CAP : CAP/CAP1 * PLUG : PLG * FULL COUPLING : FC * HALF COUPLING : HF/HF1
* STUB-IN : STU * SOCKET(HDPE/PVC) : SC * SADDLE(HDPE) : SD * FLANGE : F/F1 * GASKET : G/G1/G2 * BOLT & NUT : B/B1 * BLIND FLANGE : FB/FB1 * GATE VA. : VG/VG1/VG2 * BALL VA. : VB/VBL0/VB1/VB1L0/VB2/VB2L0 * BUTTERFLY VA. : VF/VF4 * CHECK VA. : VC/VC1/VC2/VC3/VC4/VC5/VC6/VC7
* GLOBE VA. : VL/VL1/VL2 * DIAPHRAGM VA. : VD/VDLO * DAMPER : VP * QUICK COUPLING : SQC * FLEXIBLE JOINT(STEEL) : FLXB * FLEXIBLE JOINT(RUBBER) : FLXR * FLEXIBLE JOINT(STEEL_PTFE LINED) : FLXL * FLEXIBLE HOSE : FLXH * STEAM TRAP : ST * SPRAY NOZZLE : SPN * EMERGENCY SHOWER : SSH
* STRAINER(Y-TYPE) : YSTR * STRAINER(T-TYPE) : TSTR * STRAINER(BUCKET-TYPE) : BSTR * ANCHOR PLATE : STOP * BIRD SCREEN : BS * ISOLATION KIT : IK * UNLOADING BOX : UB * AIR TRAP : AT * LOTO : LOTO * SIGHT GLASS : SG * PRESSURE GAUGE : PG * SHILED : SH * SPECIAL BOLT & NUT : BL/BL1

CLIENT SK hynix 5

INSULATION	CODE	N	CONDITION	PRESS. (kg/cm2g)	TEMP. (°C)
	THICK.	–	DESIGN	1.0	60
			OPERATING	ATM	AMB

AREA W14
UNIT 4FA
REF. PLAN DWG. CJ-M15W14-PI-A30-040013-A
REF. P & ID CJ-M15W14-PR-A20-000145

REV. NO.	DATE	DESCRIPTION	BY	CHK	APP'D
0	25.01.24	APPROVED FOR CONSTRUCTION	황래종	안남후	박동영

CONTRACTOR SK ecoplant
PROJECT NAME M15X Ph4 Project
COMMODITY H2S04
JOB NO. 22330D
LINE NO. 25A-H2S04-ST4-N-6512
SH'T NO. 01 / 01
REV. 0

경고 : 본 도면은 SK HYNIX의 기업비밀 자료로서, 어떠한 경우에도 목적 외 사용, 복제, 제3자에게 공개, 누설 및 유출할 수 없으며, 회사는 유포자의 불법 사용으로 피해가 발생할 경우 유포자에게 민/형사상 책임을 요구할 수 있음.

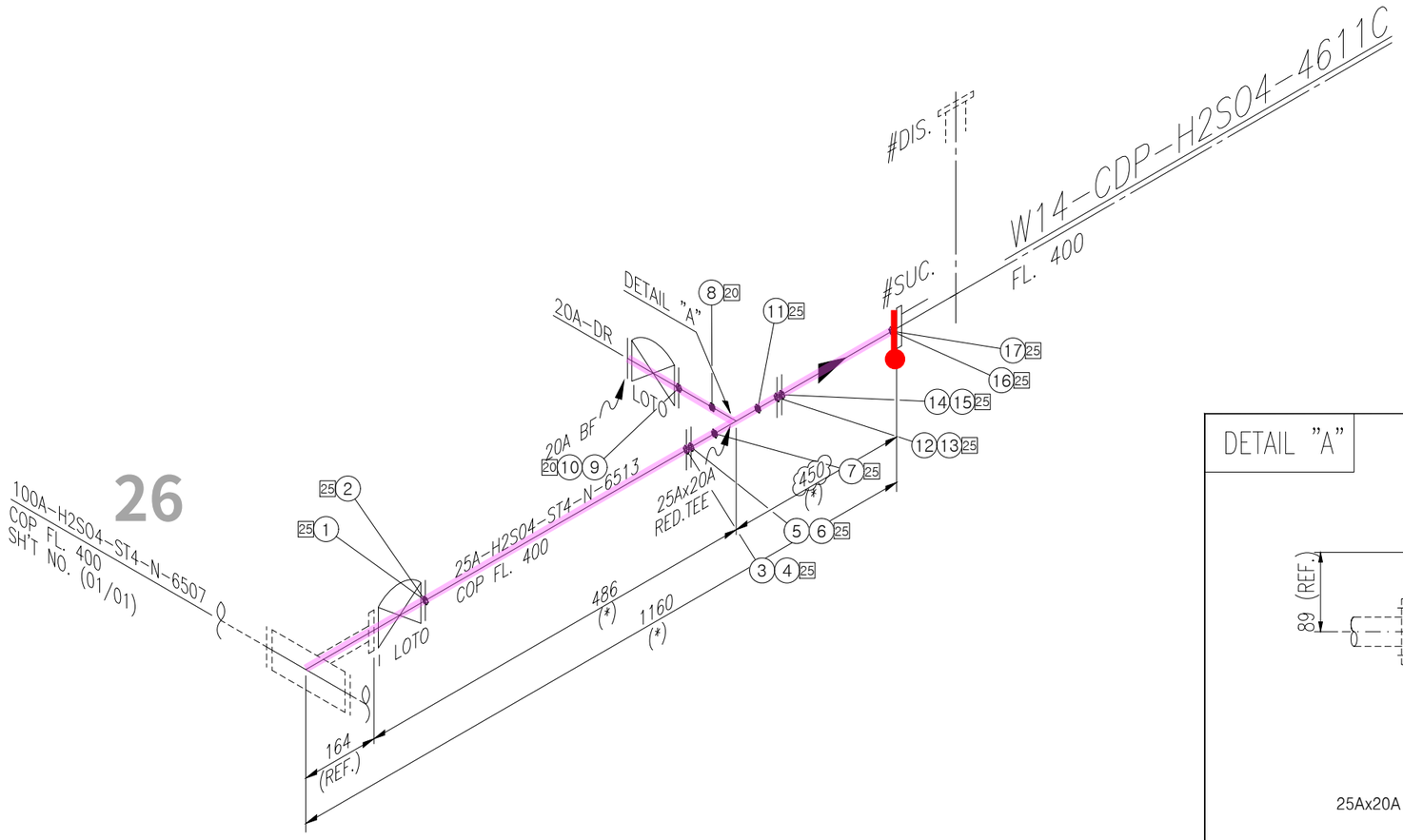

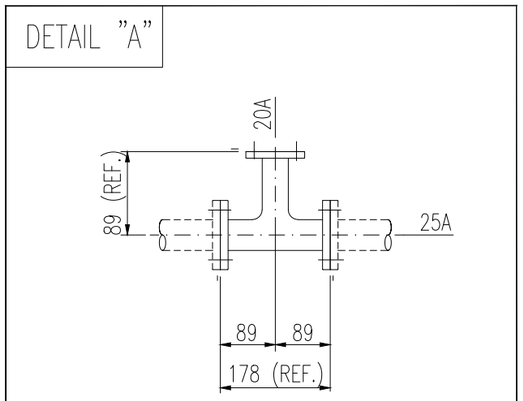

25Ax20A R.TEE W/ PTFE-LINED

상기 25Ax20A R.TEE 는 FLANGE 포함 VENDOR 공급품임.

<NOTE>
1. TRAY & ANGLE,CHANNEL SUPPORT가 적용되는 배관 ELEVATION은 현장 맞춤으로 한다.
2. (*) FIELD ADJUST

SK ecoplant

ITEM	SIZE	Q'TY	DESCRIPTION
		ST4	
P	25A	0.8M	PIPE, STS 304TP+PTFE Lined, ERW – SCH 10S
TR	25Ax20A	1EA	TEE RED, STSF304+PTFE Lined, ERW – SCH 10S
F	25A	6EA	FLG SO, KS 10K, RF, STS304+PTFE Lined
FB	20A	1EA	FLG BLIND, KS 10K, RF, STS304+PTFE Lined
G	25A	5EA	GASKET, KS 10K, RF, PTFE, 3.0MM TH'K
G	20A	2EA	GASKET, KS 10K, RF, PTFE, 3.0MM TH'K
B1	25A	5SET	MACHINE BOLT & NYLON NUTS :STS 304 / W WASHERS
B1	20A	2SET	MACHINE BOLT & NYLON NUTS :STS 304 / W WASHERS
VDLO	25A	1EA	KS 10K, RF, Teflon Lined SSC13, EPDM + PTFE Diaphragm, BB, HW
			+LOTO
VDLO	20A	1EA	KS 10K, RF, Teflon Lined SSC13, EPDM + PTFE Diaphragm, BB, HW
SH	25A	5EA	SHIELD
SH	20A	2EA	SHIELD
F	20A	1EA	FLG SO, KS 10K, RF, STS304+PTFE Lined

* PIPE : P/P1 * 90° ELBOW : E90 * 45° ELBOW : E45 * TEE : T * RED.TEE : TR * STUB-IN : STU * REINFORCING PAD : RP * CON.RED : RC * ECC.RED : RE * CON.SWAGE : RCS/RCS1 * ECC.SWAGE : RES/RES1 * NIPPLE : NP/NP1/NP2 * CAP : CAP/CAP1 * PLUG : PLG * FULL COUPLING : FC * HALF COUPLING : HF/HF1
* STUB-IN : STU * SOCKET(HDPE/PVC) : SC * SADDLE(HDPE) : SD * FLANGE : F/F1 * GASKET : G/G1/G2 * BOLT & NUT : B/B1 * BLIND FLANGE : FB/FB1 * GATE VA. : VG/VG1/VG2 * BALL VA. : VB/VBL0/VB1/VB1L0/VB2/VB2L0 * BUTTERFLY VA. : VF/VF4 * CHECK VA. : VC/VC1/VC2/VC3/VC4/VC5/VC6/VC7
* GLOBE VA. : VL/VL1/VL2 * DIAPHRAGM VA. : VD/VDLO * DAMPER : VP * QUICK COUPLING : SQC * FLEXIBLE JOINT(STEEL) : FLXB * FLEXIBLE JOINT(RUBBER) : FLXR * FLEXIBLE JOINT(STEEL_PTFE LINED) : FLXL * FLEXIBLE HOSE : FLXH * STEAM TRAP : ST * SPRAY NOZZLE : SPN * EMERGENCY SHOWER : SSH
* STRAINER(Y-TYPE) : YSTR * STRAINER(T-TYPE) : TSTR * STRAINER(BUCKET-TYPE) : BSTR * ANCHOR PLATE : STOP * BIRD SCREEN : BS * ISOLATION KIT : IK * UNLOADING BOX : UB * AIR TRAP : AT * LOTO : LOTO * SIGHT GLASS : SG * PRESSURE GAUGE : PG * SHILED : SH * SPECIAL BOLT & NUT : BL/BL1

CLIENT SK hynix 6

INSULATION	CODE	N	CONDITION	PRESS. (kg/cm2g)	TEMP. (°C)
	THICK.	–	DESIGN	1.0	60
			OPERATING	ATM	AMB

AREA W14
UNIT 4FA
REF. PLAN DWG. CJ-M15W14-PI-A30-040013-A
REF. P & ID CJ-M15W14-PR-A20-000145

REV. NO.	DATE	DESCRIPTION	BY	CHK	APP'D
0	25.01.24	APPROVED FOR CONSTRUCTION	황래종	안남후	박동영

CONTRACTOR SK ecoplant
PROJECT NAME M15X Ph4 Project
COMMODITY H2SO4
JOB NO. 22330D
LINE NO. 25A-H2SO4-ST4-N-6513
SH'T NO. 01 / 01
REV. 0

경고 : 본 도면은 SK HYNIX의 기업비밀 자료로서, 어떠한 경우에도 목적 외 사용, 복제, 제3자에게 공개, 누설 및 유출할 수 없으며, 회사는 유포자의 불법 사용으로 피해가 발생할 경우 유포자에게 민/형사상 책임을 요구할 수 있음.

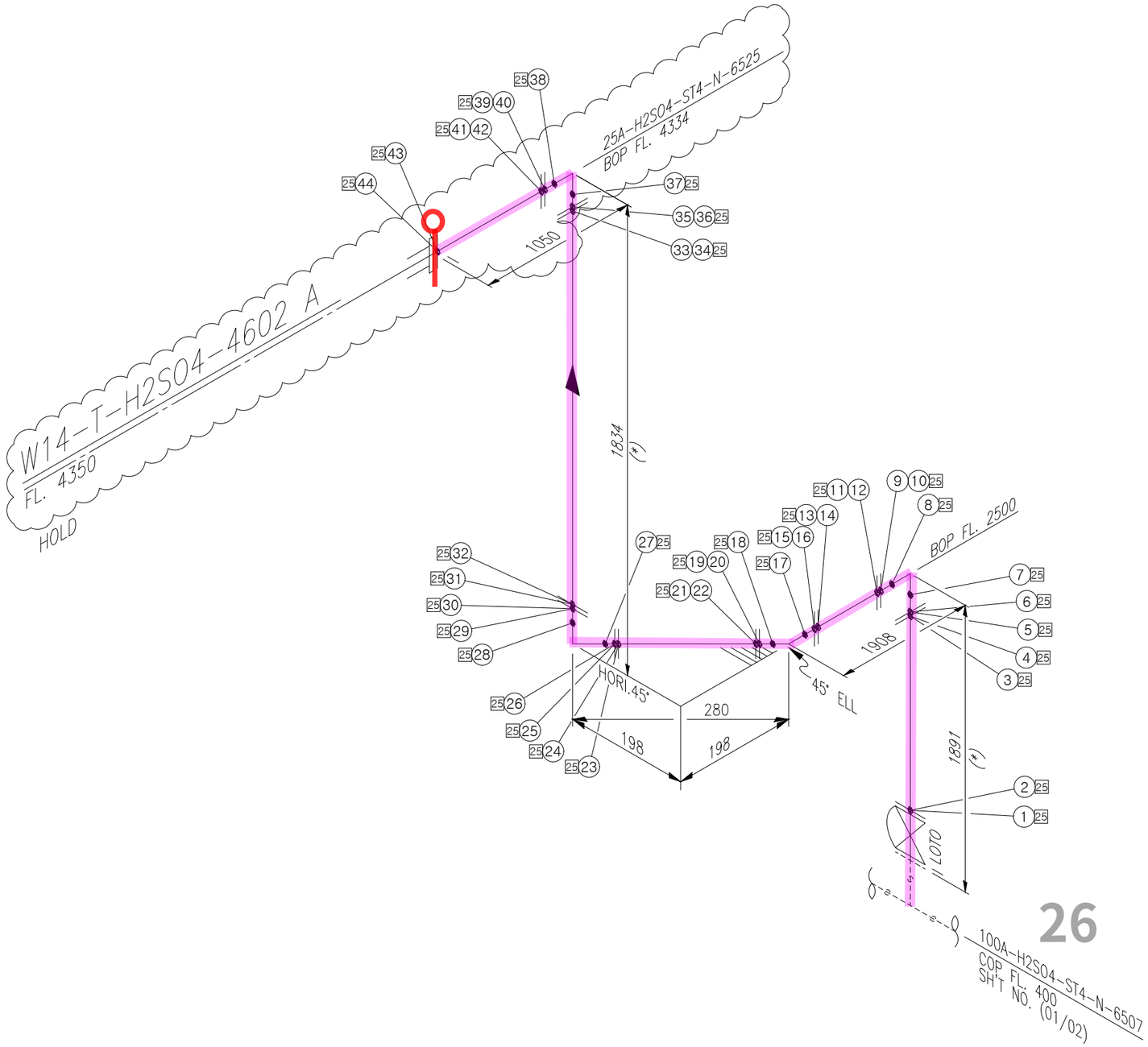

<NOTE>
1. (*) FIELD ADJUST

ITEM	SIZE	Q'TY	DESCRIPTION
		ST4	
P	25A	7.0M	PIPE, STS 304TP+PTFE Lined, ERW – SCH 10S
E90	25A	3EA	ELBOW 90 DEG, STSF304+PTFE Lined, ERW – SCH 10S
E45	25A	1EA	ELBOW 45 DEG, STSF304+PTFE Lined, ERW – SCH 10S, With FLG
VDLO	25A	1EA	KS 10K, RF, Teflon Lined SSC13, EPDM + PTFE Diaphragm, BB, HW +LOTO
F	25A	18EA	FLG SO, KS 10K, RF, STS304+PTFE Lined
G	25A	11EA	GASKET, KS 10K, RF, PTFE, 3.0MM TH'K
B1	25A	11SET	MACHINE BOLT & NYLON NUTS :STS 304 / W WASHERS
SH	25A	11EA	SHIELD

* PIPE : P/P1 * 90° ELBOW : E90 * 45° ELBOW : E45 * TEE : T * RED.TEE : TR * STUB-IN : STU * REINFORCING PAD : RP * CON.RED : RC * ECC.RED : RE * CON.SWAGE : RCS/RCS1 * ECC.SWAGE : RES/RES1 * NIPPLE : NP/NP1/NP2 * CAP : CAP/CAP1 * PLUG : PLG * FULL COUPLING : FC * HALF COUPLING : HF/HF1
* STUB-IN : STU * SOCKET(HDPE/PVC) : SC * SADDLE(HDPE) : SD * FLANGE : F/F1 * GASKET : G/G1/G2 * BOLT & NUT : B/B1 * BLIND FLANGE : FB/FB1 * GATE VA. : VG/VG1/VG2 * BALL VA. : VB/VBLO/VB1/VB1LO/VB2/VB2LO * BUTTERFLY VA. : VF/VF4 * CHECK VA. : VC/VC1/VC2/VC3/VC4/VC5/VC6/VC7
* GLOBE VA. : VL/VL1/VL2 * DIAPHRAGM VA. : VD/VDLO * DAMPER : VP * QUICK COUPLING : SQC * FLEXIBLE JOINT(STEEL) : FLXB * FLEXIBLE JOINT(RUBBER) : FLXR * FLEXIBLE JOINT(STEEL_PTFE LINED) : FLXL * FLEXIBLE HOSE : FLXH * STEAM TRAP : ST * SPRAY NOZZLE : SPN * EMERGENCY SHOWER : SSH
* STRAINER(Y-TYPE) : YSTR * STRAINER(T-TYPE) : TSTR * STRAINER(BUCKET-TYPE) : BSTR * ANCHOR PLATE : STOP * BIRD SCREEN : BS * ISOLATION KIT : IK * UNLOADING BOX : UB * AIR TRAP : AT * LOTO : LOTO * SIGHT GLASS : SG * PRESSURE GAUGE : PG * SHILED : SH * SPECIAL BOLT & NUT : BL/BL1

CLIENT SK hynix

7

INSULATION	CODE	N	CONDITION	PRESS. (kg/cm2g)	TEMP. (°C)
	THICK.	–	DESIGN	1	60
			OPERATING	ATM	AMB

AREA W14
UNIT 4FA
REF. PLAN DWG. CJ-M15W14-PI-A30-040008-A
REF. P & ID CJ-M15W14-PR-A20-000144

REV. NO.	DATE	DESCRIPTION	BY	CHK	APP'D
0	25.01.24	APPROVED FOR CONSTRUCTION	황래종	안남후	박동영

CONTRACTOR SK ecoplant
PROJECT NAME M15X Ph4 Project
COMMODITY H2S04
JOB NO. 22330D
LINE NO. 25A-H2S04-ST4-N-6525
SH'T NO. 01 / 01
REV. 0

경고 : 본 도면은 SK HYNIX의 기업비밀 자료로서, 어떠한 경우에도 목적 외 사용, 복제, 제3자에게 공개, 누설 및 유출할 수 없으며, 회사는 유포자의 불법 사용으로 피해가 발생할 경우 유포자에게 민/형사상 책임을 요구할 수 있음.

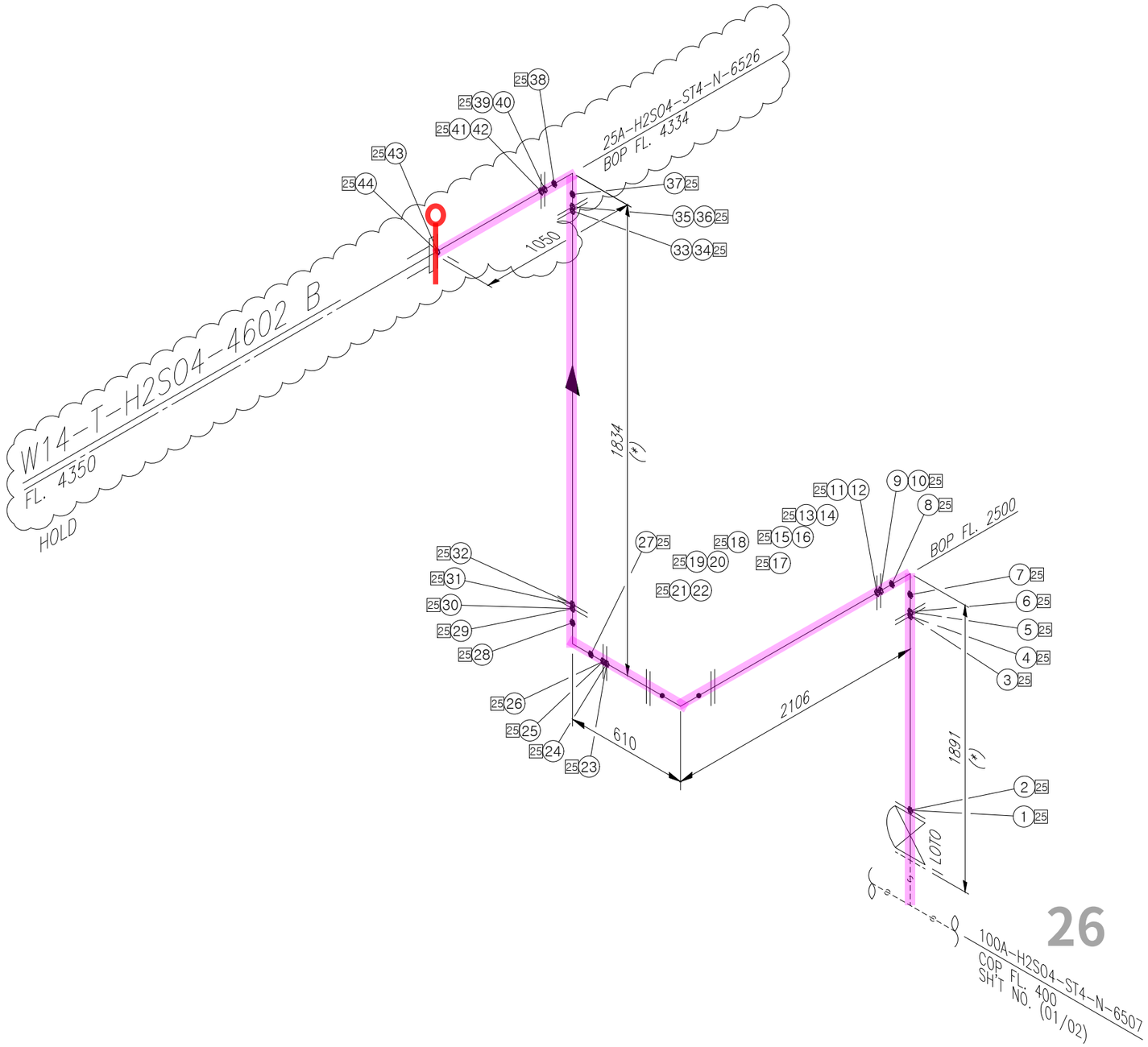

<NOTE>
1. (*) FIELD ADJUST

ITEM	SIZE	Q'TY	DESCRIPTION
		ST4	
P	25A	7.5M	PIPE, STS 304TP+PTFE Lined, ERW – SCH 10S
E90	25A	4EA	ELBOW 90 DEG, STSF304+PTFE Lined, ERW – SCH 10S
~~E45~~	~~25A~~	~~1EA~~	~~ELBOW 45 DEG, STSF304+PTFE Lined, ERW – SCH 10S, With FLG~~
VDLO	25A	1EA	KS 10K, RF, Teflon Lined SSC13, EPDM + PTFE Diaphragm, BB, HW
			+LOTO
F	25A	18EA	FLG SO, KS 10K, RF, STS304+PTFE Lined
G	25A	11EA	GASKET, KS 10K, RF, PTFE, 3.0MM TH'K
B1	25A	11SET	MACHINE BOLT & NYLON NUTS :STS 304 / W WASHERS
SH	25A	11EA	SHIELD

* PIPE : P/P1 * 90° ELBOW : E90 * 45° ELBOW : E45 * TEE : T * RED.TEE : TR * STUB-IN : STU * REINFORCING PAD : RP * CON.RED : RC * ECC.RED : RE * CON.SWAGE : RCS/RCS1 * ECC.SWAGE : RES/RES1 * NIPPLE : NP/NP1/NP2 * CAP : CAP/CAP1 * PLUG : PLG * FULL COUPLING : FC * HALF COUPLING : HF/HF1
* STUB-IN : STU * SOCKET(HDPE/PVC) : SC * SADDLE(HDPE) : SD * FLANGE : F/F1 * GASKET : G/G1/G2 * BOLT & NUT : B/B1 * BLIND FLANGE : FB/FB1 * GATE VA. : VG/VG1/VG2 * BALL VA. : VB/VBL0/VB1/VB1L0/VB2/VB2L0 * BUTTERFLY VA. : VF/VF4 * CHECK VA. : VC/VC1/VC2/VC3/VC4/VC5/VC6/VC7
* GLOBE VA. : VL/VL1/VL2 * DIAPHRAGM VA. : VD/VDL0 * DAMPER : VP * QUICK COUPLING : SQC * FLEXIBLE JOINT(STEEL) : FLXB * FLEXIBLE JOINT(RUBBER) : FLXR * FLEXIBLE JOINT(STEEL_PTFE LINED) : FLXL * FLEXIBLE HOSE : FLXH * STEAM TRAP : ST * SPRAY NOZZLE : SPN * EMERGENCY SHOWER : SSH
* STRAINER(Y-TYPE) : YSTR * STRAINER(T-TYPE) : TSTR * STRAINER(BUCKET-TYPE) : BSTR * ANCHOR PLATE : STOP * BIRD SCREEN : BS * ISOLATION KIT : IK * UNLOADING BOX : UB * AIR TRAP : AT * LOTO : LOTO * SIGHT GLASS : SG * PRESSURE GAUGE : PG * SHILED : SH * SPECIAL BOLT & NUT : BL/BL1

CLIENT SK hynix

8

INSULATION	CODE	N	CONDITION	PRESS. (kg/cm2g)	TEMP. (°C)
	THICK.	–	DESIGN	1	60
			OPERATING	ATM	AMB

AREA W14
UNIT 4FA
REF. PLAN DWG. CJ-M15W14-PI-A30-040008-A
REF. P & ID CJ-M15W14-PR-A20-000144

REV. NO.	DATE	DESCRIPTION	BY	CHK	APP'D
0	25.01.24	APPROVED FOR CONSTRUCTION	황래종	안남후	박동영

CONTRACTOR SK ecoplant
PROJECT NAME M15X Ph4 Project
COMMODITY H2S04
JOB NO. 22330D
LINE NO. 25A-H2S04-ST4-N-6526
SH'T NO. 01 / 01
REV. 0

경고 : 본 도면은 SK HYNIX의 기업비밀 자료로서, 어떠한 경우에도 목적 외 사용, 복제, 제3자에게 공개, 누설 및 유출할 수 없으며, 회사는 유포자의 불법 사용으로 피해가 발생할 경우 유포자에게 민/형사상 책임을 요구할 수 있음.

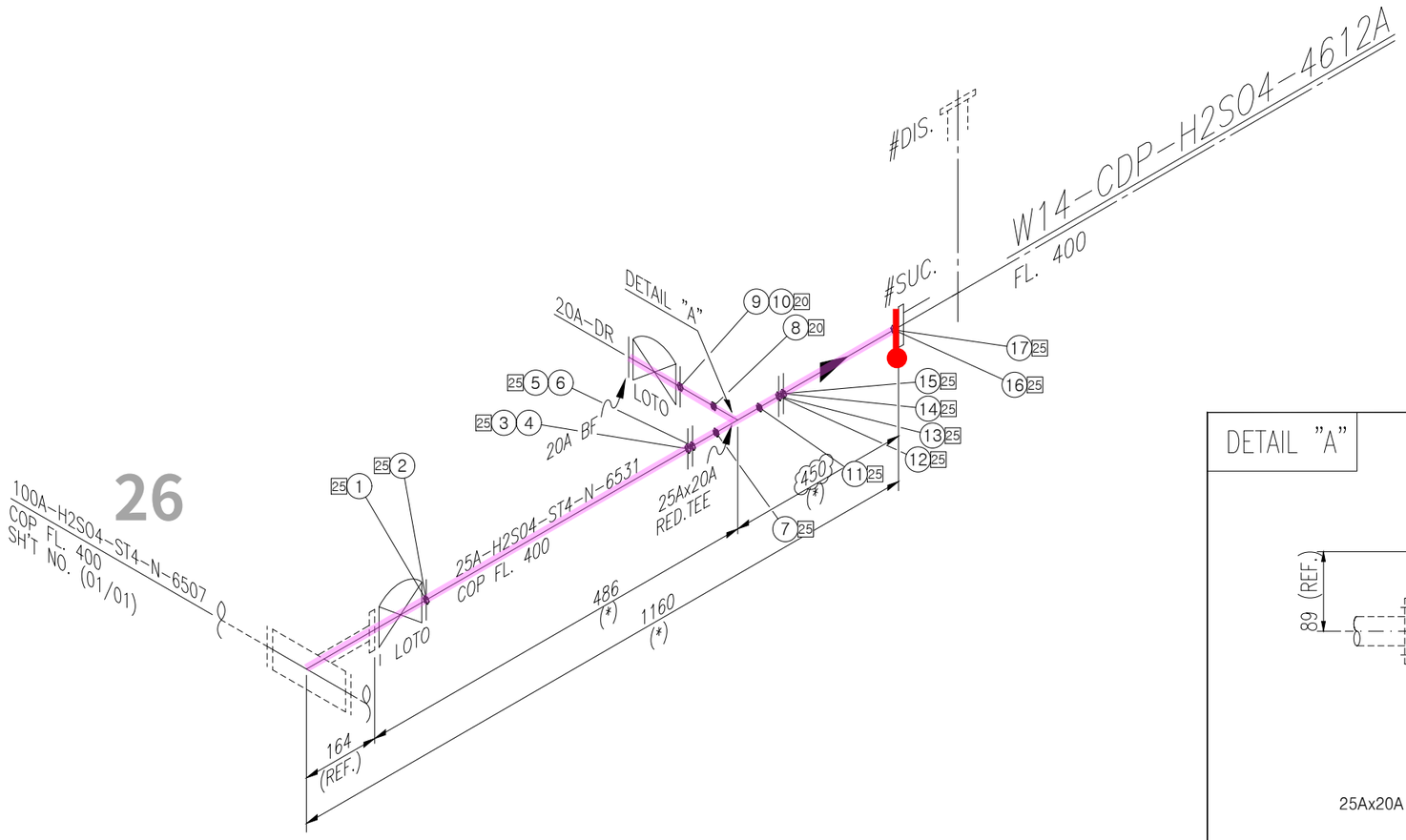

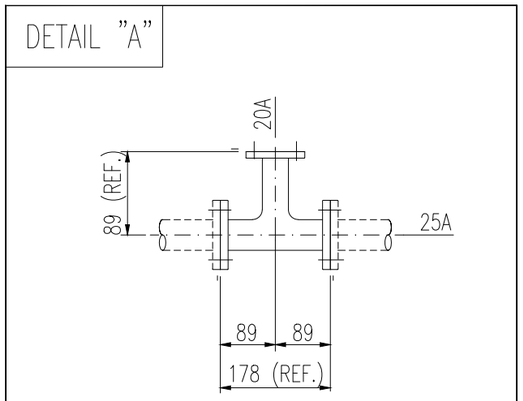

상기 25Ax20A R.TEE 는 FLANGE 포함 VENDOR 공급품임.

<NOTE>
1. TRAY & ANGLE,CHANNEL SUPPORT가 적용되는 배관 ELEVATION은 현장 맞춤으로 한다.
2. (*) FIELD ADJUST

SK ecoplant

ITEM	SIZE	Q'TY	DESCRIPTION
		ST4	
P	25A	0.8M	PIPE, STS 304TP+PTFE Lined, ERW – SCH 10S
TR	25Ax20A	1EA	TEE RED, STSF304+PTFE Lined, ERW – SCH 10S
F	25A	6EA	FLG SO, KS 10K, RF, STS304+PTFE Lined
FB	20A	1EA	FLG BLIND, KS 10K, RF, STS304+PTFE Lined
G	25A	5EA	GASKET, KS 10K, RF, PTFE, 3.0MM TH'K
G	20A	2EA	GASKET, KS 10K, RF, PTFE, 3.0MM TH'K
B1	25A	5SET	MACHINE BOLT & NYLON NUTS :STS 304 / W WASHERS
B1	20A	2SET	MACHINE BOLT & NYLON NUTS :STS 304 / W WASHERS
VDLO	25A	1EA	KS 10K, RF, Teflon Lined SSC13, EPDM + PTFE Diaphrogm, BB, HW
			+LOTO
VDLO	20A	1EA	KS 10K, RF, Teflon Lined SSC13, EPDM + PTFE Diaphrogm, BB, HW
SH	25A	5EA	SHIELD
SH	20A	2EA	SHIELD
F	20A	1EA	FLG SO, KS 10K, RF, STS304+PTFE Lined

* PIPE : P/P1 * 90° ELBOW : E90 * 45° ELBOW : E45 * TEE : T * RED.TEE : TR * STUB-IN : STU * REINFORCING PAD : RP * CON.RED : RC * ECC.RED : RE * CON.SWAGE : RCS/RCS1 * ECC.SWAGE : RES/RES1 * NIPPLE : NP/NP1/NP2 * CAP : CAP/CAP1 * PLUG : PLG * FULL COUPLING : FC * HALF COUPLING : HF/HF1
* STUB-IN : STU * SOCKET(HDPE/PVC) : SC * SADDLE(HDPE) : SD * FLANGE : F/F1 * GASKET : G/G1/G2 * BOLT & NUT : B/B1 * BLIND FLANGE : FB/FB1 * GATE VA. : VG/VG1/VG2 * BALL VA. : VB/VBLO/VB1/VB1LO/VB2/VB2LO * BUTTERFLY VA. : VF/VF4 * CHECK VA. : VC/VC1/VC2/VC3/VC4/VC5/VC6/VC7
* GLOBE VA. : VL/VL1/VL2 * DIAPHRAGM VA. : VD/VDLO * DAMPER : VP * QUICK COUPLING : SQC * FLEXIBLE JOINT(STEEL) : FLXB * FLEXIBLE JOINT(RUBBER) : FLXR * FLEXIBLE JOINT(STEEL_PTFE LINED) : FLXL * FLEXIBLE HOSE : FLXH * STEAM TRAP : ST * SPRAY NOZZLE : SPN * EMERGENCY SHOWER : SSH
* STRAINER(Y-TYPE) : YSTR * STRAINER(T-TYPE) : TSTR * STRAINER(BUCKET-TYPE) : BSTR * ANCHOR PLATE : STOP * BIRD SCREEN : BS * ISOLATION KIT : IK * UNLOADING BOX : UB * AIR TRAP : AT * LOTO : LOTO * SIGHT GLASS : SG * PRESSURE GAUGE : PG * SHILED : SH * SPECIAL BOLT & NUT : BL/BL1

CLIENT SK hynix 9

INSULATION	CODE	N	CONDITION	PRESS. (kg/cm2g)	TEMP. (°C)
	THICK.	–	DESIGN	1.0	60
			OPERATING	ATM	AMB

AREA W14
UNIT 4FA
REF. PLAN DWG. CJ-M15W14-PI-A30-040013-A
REF. P & ID CJ-M15W14-PR-A20-000145

REV. NO.	DATE	DESCRIPTION	BY	CHK	APP'D
0	25.01.24	APPROVED FOR CONSTRUCTION	황래종	안남후	박동영

CONTRACTOR SK ecoplant
PROJECT NAME M15X Ph4 Project
COMMODITY H2S04
JOB NO. 22330D
LINE NO. 25A-H2S04-ST4-N-6531
SH'T NO. 01 / 01
REV. 0

경고 : 본 도면은 SK HYNIX의 기업비밀 자료로서, 어떠한 경우에도 목적 외 사용, 복제, 제3자에게 공개, 누설 및 유출할 수 없으며, 회사는 유포자의 불법 사용으로 피해가 발생할 경우 유포자에게 민/형사상 책임을 요구할 수 있음.

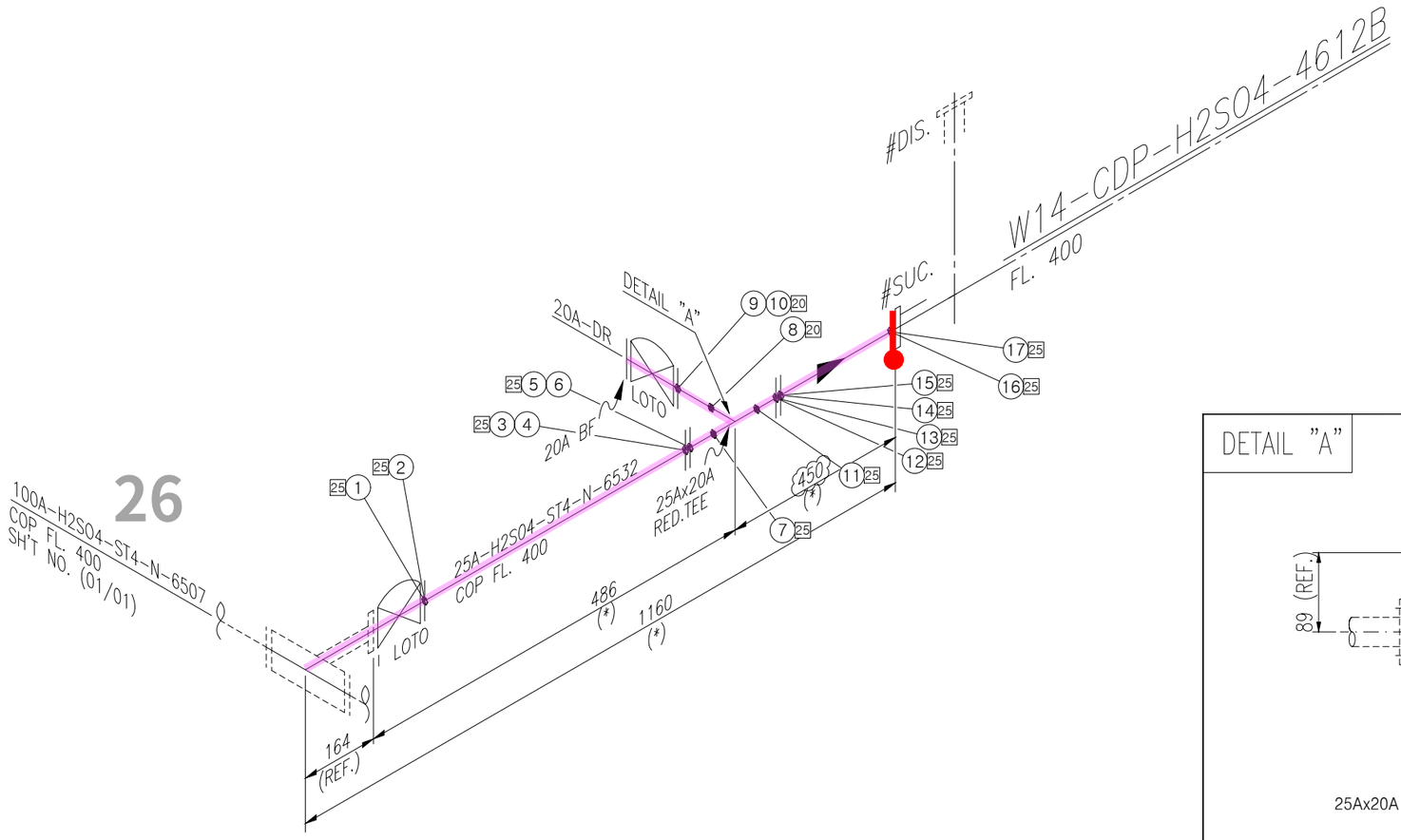

DETAIL "A"

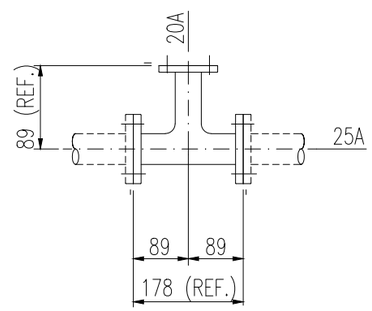

25Ax20A R.TEE W/ PTFE-LINED

상기 25Ax20A R.TEE 는 FLANGE 포함 VENDOR 공급품임.

<NOTE>
1. TRAY & ANGLE,CHANNEL SUPPORT가 적용되는 배관 ELEVATION은 현장 맞춤으로 한다.
2. (*) FIELD ADJUST

ITEM	SIZE	Q'TY	DESCRIPTION
		ST4	
P	25A	0.8M	PIPE, STS 304TP+PTFE Lined, ERW – SCH 10S
TR	25Ax20A	1EA	TEE RED, STSF304+PTFE Lined, ERW – SCH 10S
F	25A	6EA	FLG SO, KS 10K, RF, STS304+PTFE Lined
FB	20A	1EA	FLG BLIND, KS 10K, RF, STS304+PTFE Lined
G	25A	5EA	GASKET, KS 10K, RF, PTFE, 3.0MM TH'K
G	20A	2EA	GASKET, KS 10K, RF, PTFE, 3.0MM TH'K
B1	25A	5SET	MACHINE BOLT & NYLON NUTS :STS 304 / W WASHERS
B1	20A	2SET	MACHINE BOLT & NYLON NUTS :STS 304 / W WASHERS
VDLO	25A	1EA	KS 10K, RF, Teflon Lined SSC13, EPDM + PTFE Diaphrogm, BB, HW
			+LOTO
VDLO	20A	1EA	KS 10K, RF, Teflon Lined SSC13, EPDM + PTFE Diaphrogm, BB, HW
SH	25A	5EA	SHIELD
SH	20A	2EA	SHIELD
F	20A	1EA	FLG SO, KS 10K, RF, STS304+PTFE Lined

* PIPE : P/P1 * 90° ELBOW : E90 * 45° ELBOW : E45 * TEE : T * RED.TEE : TR * STUB-IN : STU * REINFORCING PAD : RP * CON.RED : RC * ECC.RED : RE * CON.SWAGE : RCS/RCS1 * ECC.SWAGE : RES/RES1 * NIPPLE : NP/NP1/NP2 * CAP : CAP/CAP1 * PLUG : PLG * FULL COUPLING : FC * HALF COUPLING : HF/HF1
* STUB-IN : STU * SOCKET(HDPE/PVC) : SC * SADDLE(HDPE) : SD * FLANGE : F/F1 * GASKET : G/G1/G2 * BOLT & NUT : B/B1 * BLIND FLANGE : FB/FB1 * GATE VA. : VG/VG1/VG2 * BALL VA. : VB/VBL0/VB1/VB1L0/VB2/VB2L0 * BUTTERFLY VA. : VF/VF4 * CHECK VA. : VC/VC1/VC2/VC3/VC4/VC5/VC6/VC7
* GLOBE VA. : VL/VL1/VL2 * DIAPHRAGM VA. : VD/VDLO * DAMPER : VP * QUICK COUPLING : SQC * FLEXIBLE JOINT(STEEL) : FLXB * FLEXIBLE JOINT(RUBBER) : FLXR * FLEXIBLE JOINT(STEEL_PTFE LINED) : FLXL * FLEXIBLE HOSE : FLXH * STEAM TRAP : ST * SPRAY NOZZLE : SPN * EMERGENCY SHOWER : SSH
* STRAINER(Y-TYPE) : YSTR * STRAINER(T-TYPE) : TSTR * STRAINER(BUCKET-TYPE) : BSTR * ANCHOR PLATE : STOP * BIRD SCREEN : BS * ISOLATION KIT : IK * UNLOADING BOX : UB * AIR TRAP : AT * LOTO : LOTO * SIGHT GLASS : SG * PRESSURE GAUGE : PG * SHILED : SH * SPECIAL BOLT & NUT : BL/BL1

CLIENT SK hynix 10

INSULATION	CODE	N	CONDITION	PRESS. (kg/cm2g)	TEMP. (°C)
	THICK.	–	DESIGN	1.0	60
			OPERATING	ATM	AMB

AREA W14
UNIT 4FA
REF. PLAN DWG. CJ-M15W14-PI-A30-040013-A
REF. P & ID CJ-M15W14-PR-A20-000145

REV. NO.	DATE	DESCRIPTION	BY	CHK	APP'D
0	25.01.24	APPROVED FOR CONSTRUCTION	황래종	안남후	박동영

CONTRACTOR SK ecoplant
PROJECT NAME M15X Ph4 Project
COMMODITY H2SO4
JOB NO. 22330D
LINE NO. 25A-H2SO4-ST4-N-6532
SH'T NO. 01 / 01
REV. 0

경고 : 본 도면은 SK HYNIX의 기업비밀 자료로서, 어떠한 경우에도 목적 외 사용, 복제, 제3자에게 공개, 누설 및 유출할 수 없으며, 회사는 유포자의 불법 사용으로 피해가 발생할 경우 유포자에게 민/형사상 책임을 요구할 수 있음.

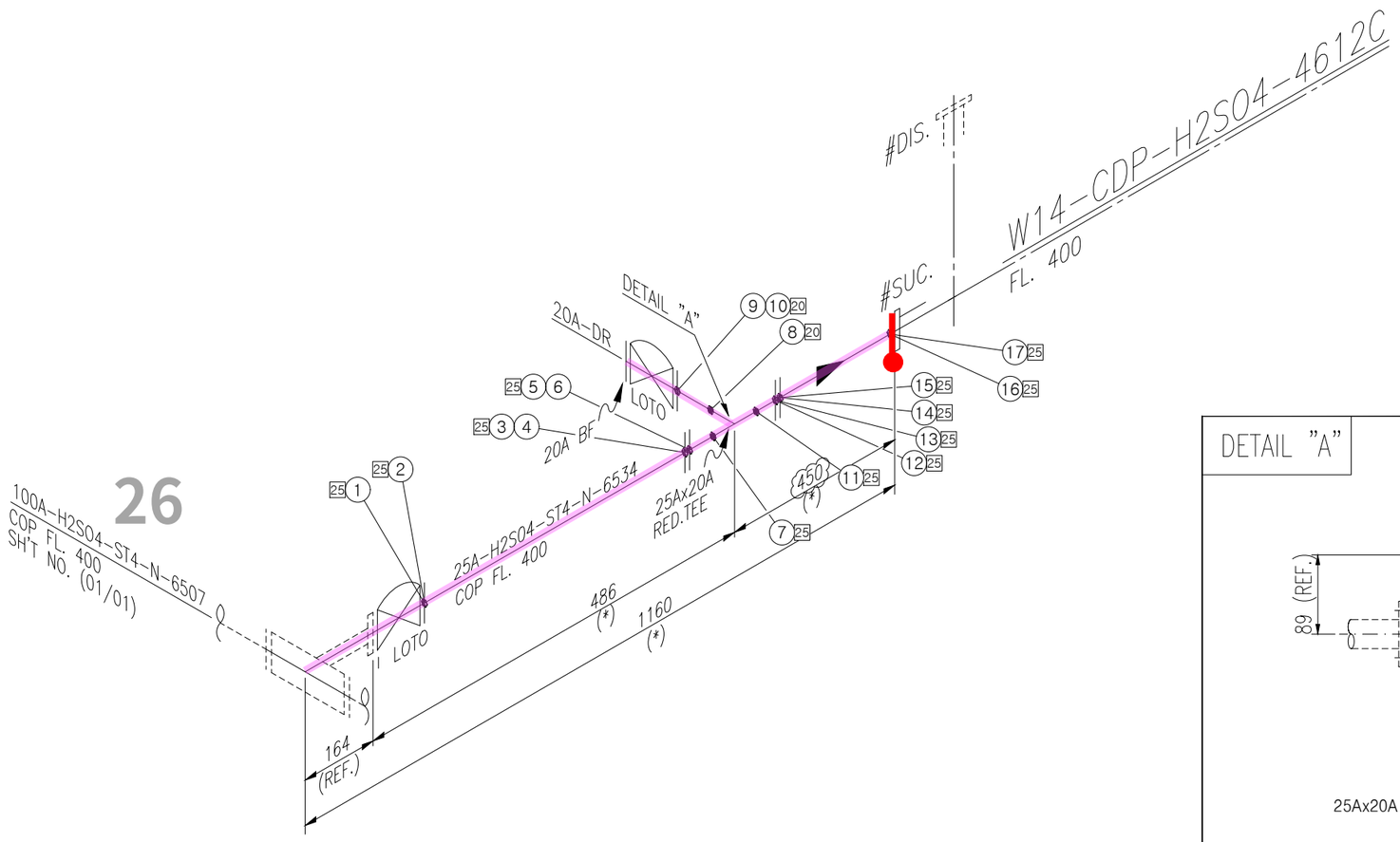

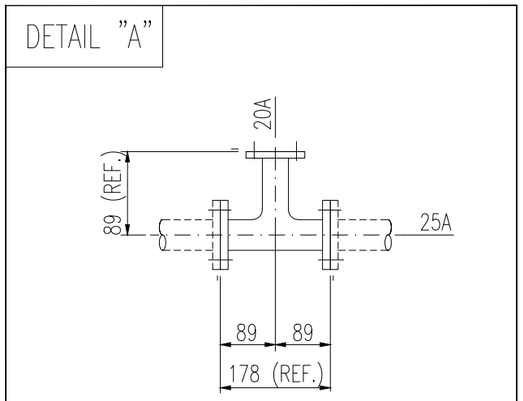

25Ax20A R.TEE W/ PTFE-LINED

상기 25Ax20A R.TEE 는 FLANGE 포함 VENDOR 공급품임.

<NOTE>
1. TRAY & ANGLE,CHANNEL SUPPORT가 적용되는 배관 ELEVATION은 현장 맞춤으로 한다.
2. (*) FIELD ADJUST

SK ecoplant

ITEM	SIZE	Q'TY	DESCRIPTION
		ST4	
P	25A	0.8M	PIPE, STS 304TP+PTFE Lined, ERW – SCH 10S
TR	25Ax20A	1EA	TEE RED, STSF304+PTFE Lined, ERW – SCH 10S
F	25A	6EA	FLG SO, KS 10K, RF, STS304+PTFE Lined
FB	20A	1EA	FLG BLIND, KS 10K, RF, STS304+PTFE Lined
G	25A	5EA	GASKET, KS 10K, RF, PTFE, 3.0MM TH'K
G	20A	2EA	GASKET, KS 10K, RF, PTFE, 3.0MM TH'K
B1	25A	5SET	MACHINE BOLT & NYLON NUTS :STS 304 / W WASHERS
B1	20A	2SET	MACHINE BOLT & NYLON NUTS :STS 304 / W WASHERS
VDLO	25A	1EA	KS 10K, RF, Teflon Lined SSC13, EPDM + PTFE Diaphragm, BB, HW
			+LOTO
VDLO	20A	1EA	KS 10K, RF, Teflon Lined SSC13, EPDM + PTFE Diaphragm, BB, HW
SH	25A	5EA	SHIELD
SH	20A	2EA	SHIELD
F	20A	1EA	FLG SO, KS 10K, RF, STS304+PTFE Lined

* PIPE : P/P1 * 90° ELBOW : E90 * 45° ELBOW : E45 * TEE : T * RED.TEE : TR * STUB-IN : STU * REINFORCING PAD : RP * CON.RED : RC * ECC.RED : RE * CON.SWAGE : RCS/RCS1 * ECC.SWAGE : RES/RES1 * NIPPLE : NP/NP1/NP2 * CAP : CAP/CAP1 * PLUG : PLG * FULL COUPLING : FC * HALF COUPLING : HF/HF1
* STUB-IN : STU * SOCKET(HDPE/PVC) : SC * SADDLE(HDPE) : SD * FLANGE : F/F1 * GASKET : G/G1/G2 * BOLT & NUT : B/B1 * BLIND FLANGE : FB/FB1 * GATE VA. : VG/VG1/VG2 * BALL VA. : VB/VBLO/VB1/VB1LO/VB2/VB2LO * BUTTERFLY VA. : VF/VF4 * CHECK VA. : VC/VC1/VC2/VC3/VC4/VC5/VC6/VC7
* GLOBE VA. : VL/VL1/VL2 * DIAPHRAGM VA. : VD/VDLO * DAMPER : VP * QUICK COUPLING : SQC * FLEXIBLE JOINT(STEEL) : FLXB * FLEXIBLE JOINT(RUBBER) : FLXR * FLEXIBLE JOINT(STEEL_PTFE LINED) : FLXL * FLEXIBLE HOSE : FLXH * STEAM TRAP : ST * SPRAY NOZZLE : SPN * EMERGENCY SHOWER : SSH
* STRAINER(Y-TYPE) : YSTR * STRAINER(T-TYPE) : TSTR * STRAINER(BUCKET-TYPE) : BSTR * ANCHOR PLATE : STOP * BIRD SCREEN : BS * ISOLATION KIT : IK * UNLOADING BOX : UB * AIR TRAP : AT * LOTO : LOTO * SIGHT GLASS : SG * PRESSURE GAUGE : PG * SHILED : SH * SPECIAL BOLT & NUT : BL/BL1

CLIENT SK hynix 11

INSULATION	CODE	N	CONDITION	PRESS. (kg/cm2g)	TEMP. (°C)
	THICK.	–	DESIGN	1.0	60
			OPERATING	ATM	AMB

AREA W14
UNIT 4FA
REF. PLAN DWG. CJ-M15W14-PI-A30-040013-A
REF. P & ID CJ-M15W14-PR-A20-000145

REV. NO.	DATE	DESCRIPTION	BY	CHK	APP'D
0	25.01.24	APPROVED FOR CONSTRUCTION	황래종	안남후	박동영

CONTRACTOR SK ecoplant
PROJECT NAME M15X Ph4 Project
COMMODITY H2S04
JOB NO. 22330D
LINE NO. 25A-H2S04-ST4-N-6534
SH'T NO. 01 / 01
REV. 0

경고 : 본 도면은 SK HYNIX의 기업비밀 자료로서, 어떠한 경우에도 목적 외 사용, 복제, 제3자에게 공개, 누설 및 유출할 수 없으며, 회사는 유포자의 불법 사용으로 피해가 발생할 경우 유포자에게 민/형사상 책임을 요구할 수 있음.

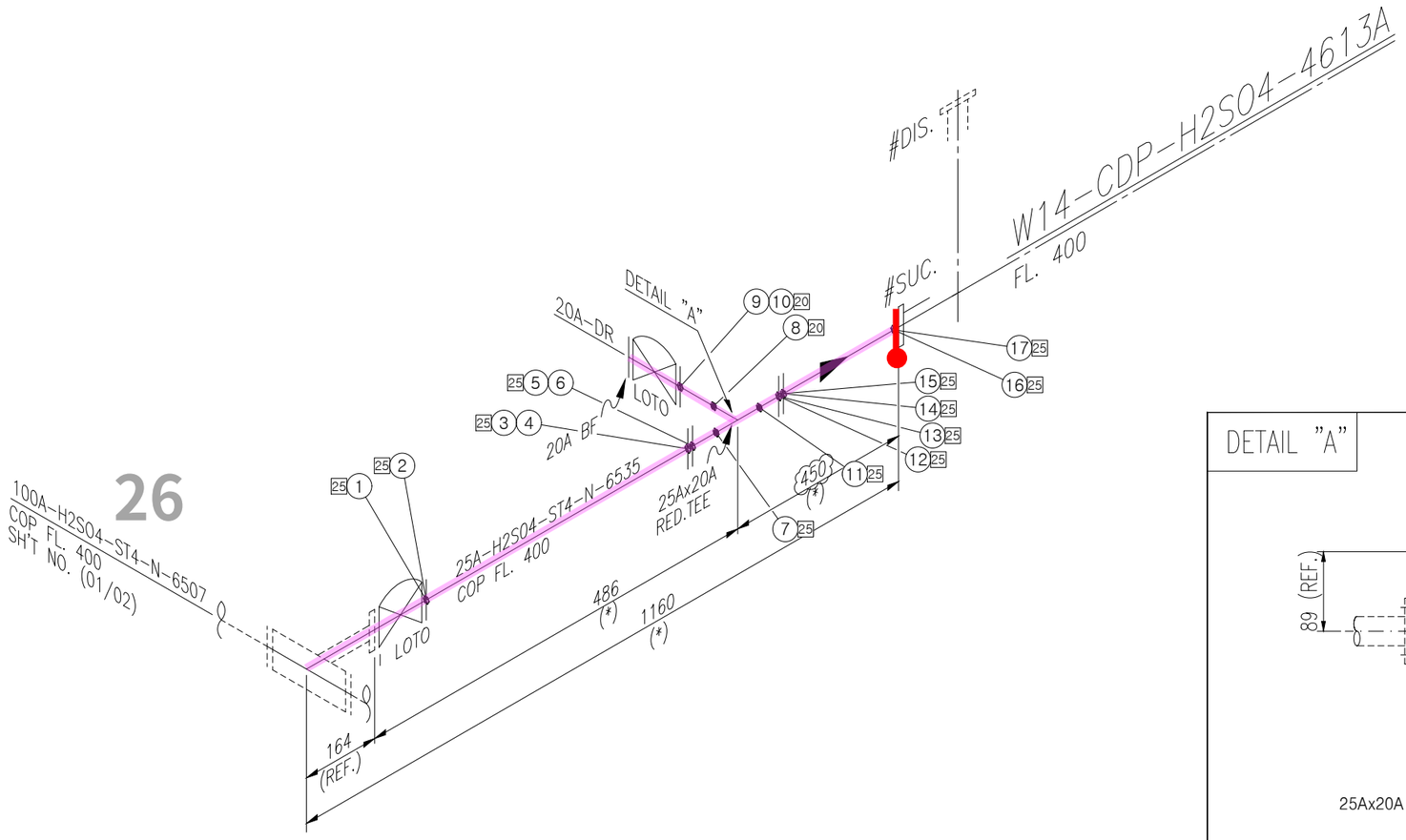

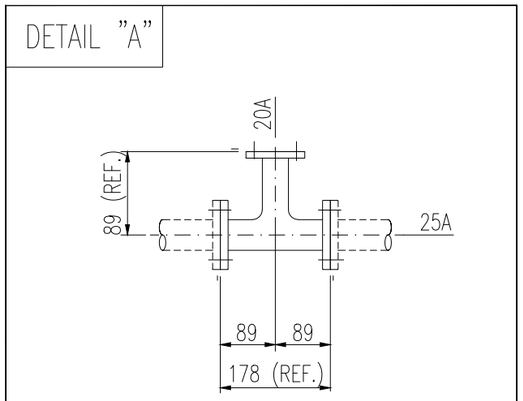

25Ax20A R.TEE W/ PTFE-LINED

상기 25Ax20A R.TEE 는 FLANGE 포함 VENDOR 공급품임.

<NOTE>
1. TRAY & ANGLE,CHANNEL SUPPORT가 적용되는 배관 ELEVATION은 현장 맞춤으로 한다.
2. (*) FIELD ADJUST

SK ecoplant

ITEM	SIZE	Q'TY	DESCRIPTION
		ST4	
P	25A	0.8M	PIPE, STS 304TP+PTFE Lined, ERW – SCH 10S
TR	25Ax20A	1EA	TEE RED, STSF304+PTFE Lined, ERW – SCH 10S
F	25A	6EA	FLG SO, KS 10K, RF, STS304+PTFE Lined
FB	20A	1EA	FLG BLIND, KS 10K, RF, STS304+PTFE Lined
G	25A	5EA	GASKET, KS 10K, RF, PTFE, 3.0MM TH'K
G	20A	2EA	GASKET, KS 10K, RF, PTFE, 3.0MM TH'K
B1	25A	5SET	MACHINE BOLT & NYLON NUTS :STS 304 / W WASHERS
B1	20A	2SET	MACHINE BOLT & NYLON NUTS :STS 304 / W WASHERS
VDLO	25A	1EA	KS 10K, RF, Teflon Lined SSC13, EPDM + PTFE Diaphroagm, BB, HW
			+LOTO
VDLO	20A	1EA	KS 10K, RF, Teflon Lined SSC13, EPDM + PTFE Diaphroagm, BB, HW
SH	25A	5EA	SHIELD
SH	20A	2EA	SHIELD
F	20A	1EA	FLG SO, KS 10K, RF, STS304+PTFE Lined

* PIPE : P/P1 * 90° ELBOW : E90 * 45° ELBOW : E45 * TEE : T * RED.TEE : TR * STUB-IN : STU * REINFORCING PAD : RP * CON.RED : RC * ECC.RED : RE * CON.SWAGE : RCS/RCS1 * ECC.SWAGE : RES/RES1 * NIPPLE : NP/NP1/NP2 * CAP : CAP/CAP1 * PLUG : PLG * FULL COUPLING : FC * HALF COUPLING : HF/HF1
* STUB-IN : STU * SOCKET(HDPE/PVC) : SC * SADDLE(HDPE) : SD * FLANGE : F/F1 * GASKET : G/G1/G2 * BOLT & NUT : B/B1 * BLIND FLANGE : FB/FB1 * GATE VA. : VG/VG1/VG2 * BALL VA. : VB/VBLO/VB1/VB1LO/VB2/VB2LO * BUTTERFLY VA. : VF/VF4 * CHECK VA. : VC/VC1/VC2/VC3/VC4/VC5/VC6/VC7
* GLOBE VA. : VL/VL1/VL2 * DIAPHRAGM VA. : VD/VDLO * DAMPER : VP * QUICK COUPLING : SQC * FLEXIBLE JOINT(STEEL) : FLXB * FLEXIBLE JOINT(RUBBER) : FLXR * FLEXIBLE JOINT(STEEL_PTFE LINED) : FLXL * FLEXIBLE HOSE : FLXH * STEAM TRAP : ST * SPRAY NOZZLE : SPN * EMERGENCY SHOWER : SSH
* STRAINER(Y-TYPE) : YSTR * STRAINER(T-TYPE) : TSTR * STRAINER(BUCKET-TYPE) : BSTR * ANCHOR PLATE : STOP * BIRD SCREEN : BS * ISOLATION KIT : IK * UNLOADING BOX : UB * AIR TRAP : AT * LOTO : LOTO * SIGHT GLASS : SG * PRESSURE GAUGE : PG * SHILED : SH * SPECIAL BOLT & NUT : BL/BL1

CLIENT SK hynix 12

INSULATION	CODE	N	CONDITION	PRESS. (kg/cm2g)	TEMP. (°C)
	THICK.	–	DESIGN	1.0	60
			OPERATING	ATM	AMB

AREA W14
UNIT 4FA
REF. PLAN DWG. CJ-M15W14-PI-A30-040013-A
REF. P & ID CJ-M15W14-PR-A20-000144

REV. NO.	DATE	DESCRIPTION	BY	CHK	APP'D
0	25.01.24	APPROVED FOR CONSTRUCTION	황래종	안남후	박동영

CONTRACTOR SK ecoplant
PROJECT NAME M15X Ph4 Project
COMMODITY H2SO4
JOB NO. 22330D
LINE NO. 25A-H2SO4-ST4-N-6535
SH'T NO. 01 / 01
REV. 0

경고 : 본 도면은 SK HYNIX의 기업비밀 자료로서, 어떠한 경우에도 목적 외 사용, 복제, 제3자에게 공개, 누설 및 유출할 수 없으며, 회사는 유포자의 불법 사용으로 피해가 발생할 경우 유포자에게 민/형사상 책임을 요구할 수 있음.

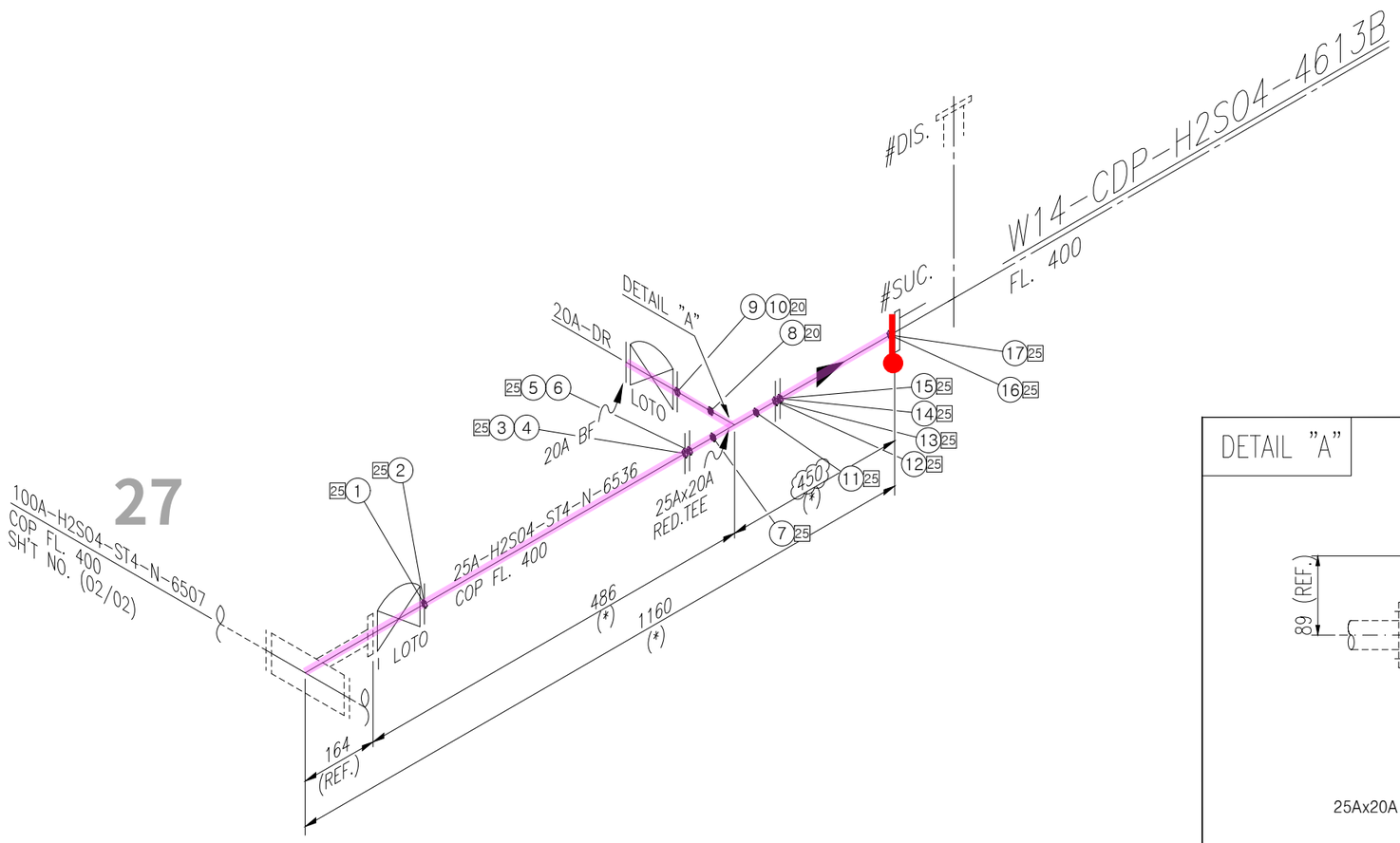

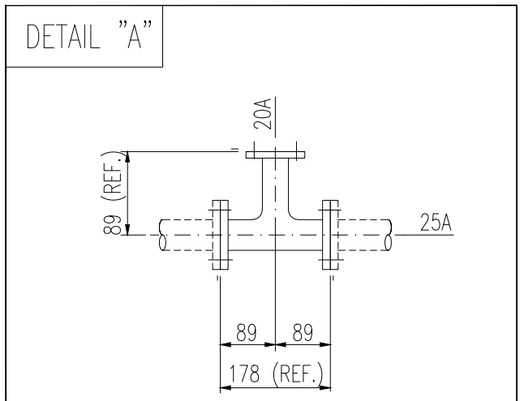

25Ax20A R.TEE W/ PTFE-LINED

상기 25Ax20A R.TEE 는 FLANGE 포함 VENDOR 공급품임.

<NOTE>
1. TRAY & ANGLE,CHANNEL SUPPORT가 적용되는 배관 ELEVATION은 현장 맞춤으로 한다.
2. (*) FIELD ADJUST

ITEM	SIZE	Q'TY	DESCRIPTION
		ST4	
P	25A	0.8M	PIPE, STS 304TP+PTFE Lined, ERW – SCH 10S
TR	25Ax20A	1EA	TEE RED, STSF304+PTFE Lined, ERW – SCH 10S
F	25A	6EA	FLG SO, KS 10K, RF, STS304+PTFE Lined
FB	20A	1EA	FLG BLIND, KS 10K, RF, STS304+PTFE Lined
G	25A	5EA	GASKET, KS 10K, RF, PTFE, 3.0MM TH'K
G	20A	2EA	GASKET, KS 10K, RF, PTFE, 3.0MM TH'K
B1	25A	5SET	MACHINE BOLT & NYLON NUTS :STS 304 / W WASHERS
B1	20A	2SET	MACHINE BOLT & NYLON NUTS :STS 304 / W WASHERS
VDLO	25A	1EA	KS 10K, RF, Teflon Lined SSC13, EPDM + PTFE Diaphrogm, BB, HW
			+LOTO
VDLO	20A	1EA	KS 10K, RF, Teflon Lined SSC13, EPDM + PTFE Diaphrogm, BB, HW
SH	25A	5EA	SHIELD
SH	20A	2EA	SHIELD
F	20A	1EA	FLG SO, KS 10K, RF, STS304+PTFE Lined

* PIPE : P/P1 * 90° ELBOW : E90 * 45° ELBOW : E45 * TEE : T * RED.TEE : TR * STUB-IN : STU * REINFORCING PAD : RP * CON.RED : RC * ECC.RED : RE * CON.SWAGE : RCS/RCS1 * ECC.SWAGE : RES/RES1 * NIPPLE : NP/NP1/NP2 * CAP : CAP/CAP1 * PLUG : PLG * FULL COUPLING : FC * HALF COUPLING : HF/HF1
* STUB-IN : STU * SOCKET(HDPE/PVC) : SC * SADDLE(HDPE) : SD * FLANGE : F/F1 * GASKET : G/G1/G2 * BOLT & NUT : B/B1 * BLIND FLANGE : FB/FB1 * GATE VA. : VG/VG1/VG2 * BALL VA. : VB/VBLO/VB1/VB1LO/VB2/VB2LO * BUTTERFLY VA. : VF/VF4 * CHECK VA. : VC/VC1/VC2/VC3/VC4/VC5/VC6/VC7
* GLOBE VA. : VL/VL1/VL2 * DIAPHRAGM VA. : VD/VDLO * DAMPER : VP * QUICK COUPLING : SQC * FLEXIBLE JOINT(STEEL) : FLXB * FLEXIBLE JOINT(RUBBER) : FLXR * FLEXIBLE JOINT(STEEL_PTFE LINED) : FLXL * FLEXIBLE HOSE : FLXH * STEAM TRAP : ST * SPRAY NOZZLE : SPN * EMERGENCY SHOWER : SSH
* STRAINER(Y-TYPE) : YSTR * STRAINER(T-TYPE) : TSTR * STRAINER(BUCKET-TYPE) : BSTR * ANCHOR PLATE : STOP * BIRD SCREEN : BS * ISOLATION KIT : IK * UNLOADING BOX : UB * AIR TRAP : AT * LOTO : LOTO * SIGHT GLASS : SG * PRESSURE GAUGE : PG * SHILED : SH * SPECIAL BOLT & NUT : BL/BL1

CLIENT SK hynix 13

INSULATION	CODE	N	CONDITION	PRESS. (kg/cm2g)	TEMP. (°C)
	THICK.	–	DESIGN	1.0	60
			OPERATING	ATM	AMB

AREA W14
UNIT 4FA
REF. PLAN DWG. CJ-M15W14-PI-A30-040013-A
REF. P & ID CJ-M15W14-PR-A20-000144

REV. NO.	DATE	DESCRIPTION	BY	CHK	APP'D
0	25.01.24	APPROVED FOR CONSTRUCTION	황래종	안남후	박동영

CONTRACTOR SK ecoplant
PROJECT NAME M15X Ph4 Project
COMMODITY H2SO4
JOB NO. 22330D
LINE NO. 25A-H2SO4-ST4-N-6536
SH'T NO. 01 / 01
REV. 0

경고 : 본 도면은 SK HYNIX의 기업비밀 자료로서, 어떠한 경우에도 목적 외 사용, 복제, 제3자에게 공개, 누설 및 유출할 수 없으며, 회사는 유포자의 불법 사용으로 피해가 발생할 경우 유포자에게 민/형사상 책임을 요구할 수 있음.

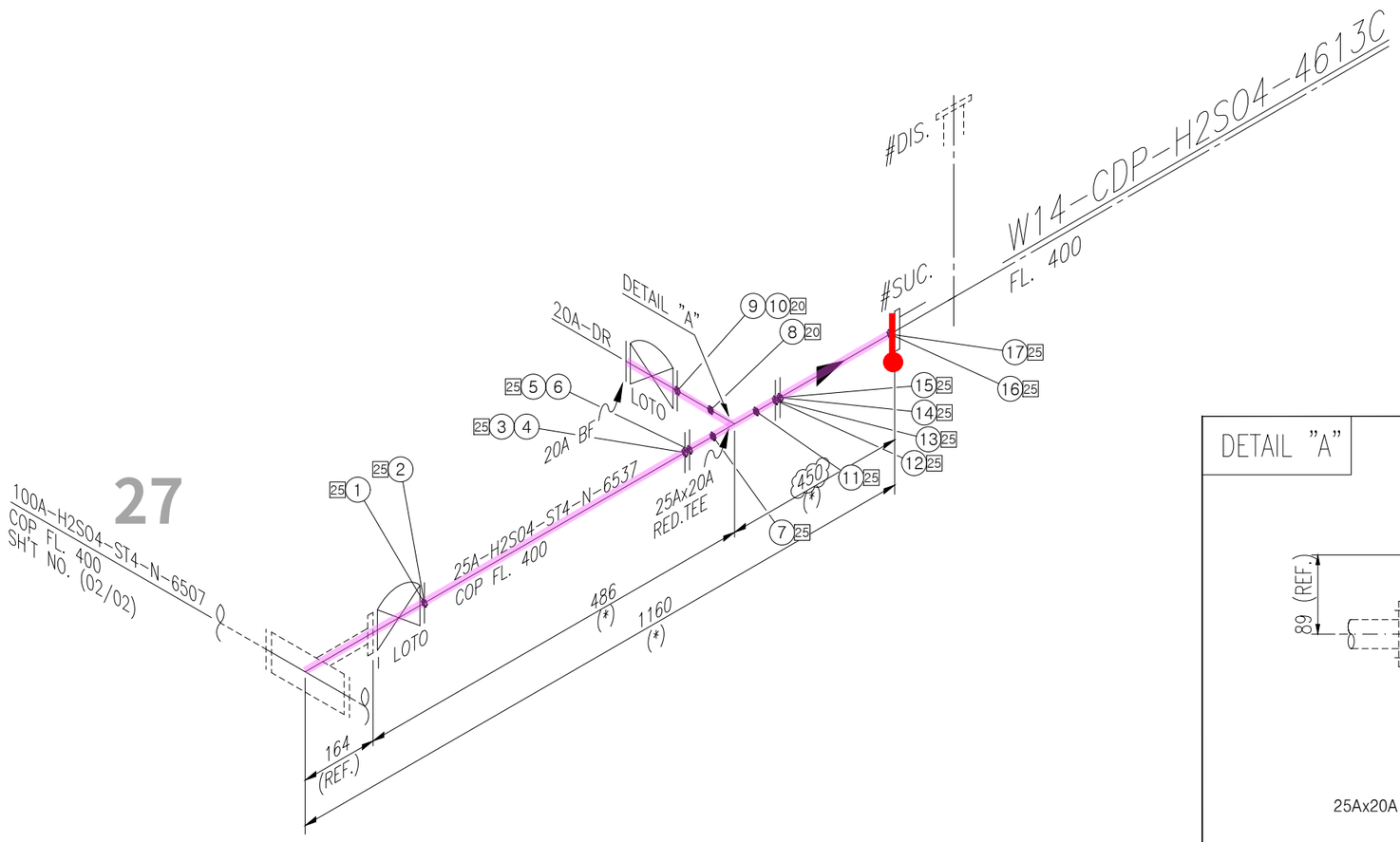

DETAIL "A"

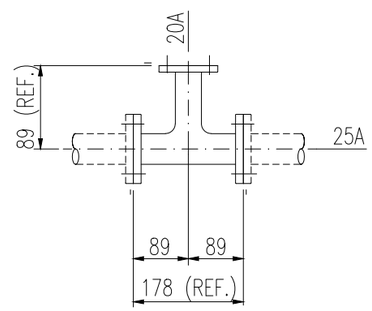

25Ax20A R.TEE W/ PTFE-LINED

상기 25Ax20A R.TEE 는 FLANGE 포함 VENDOR 공급품임.

<NOTE>
1. TRAY & ANGLE,CHANNEL SUPPORT가 적용되는 배관 ELEVATION은 현장 맞춤으로 한다.
2. (*) FIELD ADJUST

SK ecoplant

ITEM	SIZE	Q'TY	DESCRIPTION
		ST4	
P	25A	0.8M	PIPE, STS 304TP+PTFE Lined, ERW – SCH 10S
TR	25Ax20A	1EA	TEE RED, STSF304+PTFE Lined, ERW – SCH 10S
F	25A	6EA	FLG SO, KS 10K, RF, STS304+PTFE Lined
FB	20A	1EA	FLG BLIND, KS 10K, RF, STS304+PTFE Lined
G	25A	5EA	GASKET, KS 10K, RF, PTFE, 3.0MM TH'K
G	20A	2EA	GASKET, KS 10K, RF, PTFE, 3.0MM TH'K
B1	25A	5SET	MACHINE BOLT & NYLON NUTS :STS 304 / W WASHERS
B1	20A	2SET	MACHINE BOLT & NYLON NUTS :STS 304 / W WASHERS
VDLO	25A	1EA	KS 10K, RF, Teflon Lined SSC13, EPDM + PTFE Diaphrogm, BB, HW
			+LOTO
VDLO	20A	1EA	KS 10K, RF, Teflon Lined SSC13, EPDM + PTFE Diaphrogm, BB, HW
SH	25A	5EA	SHIELD
SH	20A	2EA	SHIELD
F	20A	1EA	FLG SO, KS 10K, RF, STS304+PTFE Lined

* PIPE : P/P1 * 90° ELBOW : E90 * 45° ELBOW : E45 * TEE : T * RED.TEE : TR * STUB-IN : STU * REINFORCING PAD : RP * CON.RED : RC * ECC.RED : RE * CON.SWAGE : RCS/RCS1 * ECC.SWAGE : RES/RES1 * NIPPLE : NP/NP1/NP2 * CAP : CAP/CAP1 * PLUG : PLG * FULL COUPLING : FC * HALF COUPLING : HF/HF1
* STUB-IN : STU * SOCKET(HDPE/PVC) : SC * SADDLE(HDPE) : SD * FLANGE : F/F1 * GASKET : G/G1/G2 * BOLT & NUT : B/B1 * BLIND FLANGE : FB/FB1 * GATE VA. : VG/VG1/VG2 * BALL VA. : VB/VBLO/VB1/VB1LO/VB2/VB2LO * BUTTERFLY VA. : VF/VF4 * CHECK VA. : VC/VC1/VC2/VC3/VC4/VC5/VC6/VC7
* GLOBE VA. : VL/VL1/VL2 * DIAPHRAGM VA. : VD/VDLO * DAMPER : VP * QUICK COUPLING : SQC * FLEXIBLE JOINT(STEEL) : FLXB * FLEXIBLE JOINT(RUBBER) : FLXR * FLEXIBLE JOINT(STEEL_PTFE LINED) : FLXL * FLEXIBLE HOSE : FLXH * STEAM TRAP : ST * SPRAY NOZZLE : SPN * EMERGENCY SHOWER : SSH
* STRAINER(Y-TYPE) : YSTR * STRAINER(T-TYPE) : TSTR * STRAINER(BUCKET-TYPE) : BSTR * ANCHOR PLATE : STOP * BIRD SCREEN : BS * ISOLATION KIT : IK * UNLOADING BOX : UB * AIR TRAP : AT * LOTO : LOTO * SIGHT GLASS : SG * PRESSURE GAUGE : PG * SHILED : SH * SPECIAL BOLT & NUT : BL/BL1

CLIENT SK hynix 14

INSULATION	CODE	N	CONDITION	PRESS. (kg/cm2g)	TEMP. (°C)
	THICK.	–	DESIGN	1.0	60
			OPERATING	ATM	AMB

AREA W14
UNIT 4FA
REF. PLAN DWG. CJ-M15W14-PI-A30-040013-A
REF. P & ID CJ-M15W14-PR-A20-000144

REV. NO.	DATE	DESCRIPTION	BY	CHK	APP'D
0	25.01.24	APPROVED FOR CONSTRUCTION	황래종	안남후	박동영

CONTRACTOR SK ecoplant
PROJECT NAME M15X Ph4 Project
COMMODITY H2SO4
JOB NO. 22330D
LINE NO. 25A-H2SO4-ST4-N-6537
SH'T NO. 01 / 01
REV. 0

경고 : 본 도면은 SK HYNIX의 기업비밀 자료로서, 어떠한 경우에도 목적 외 사용, 복제, 제3자에게 공개, 누설 및 유출할 수 없으며, 회사는 유포자의 불법 사용으로 피해가 발생할 경우 유포자에게 민/형사상 책임을 요구할 수 있음.

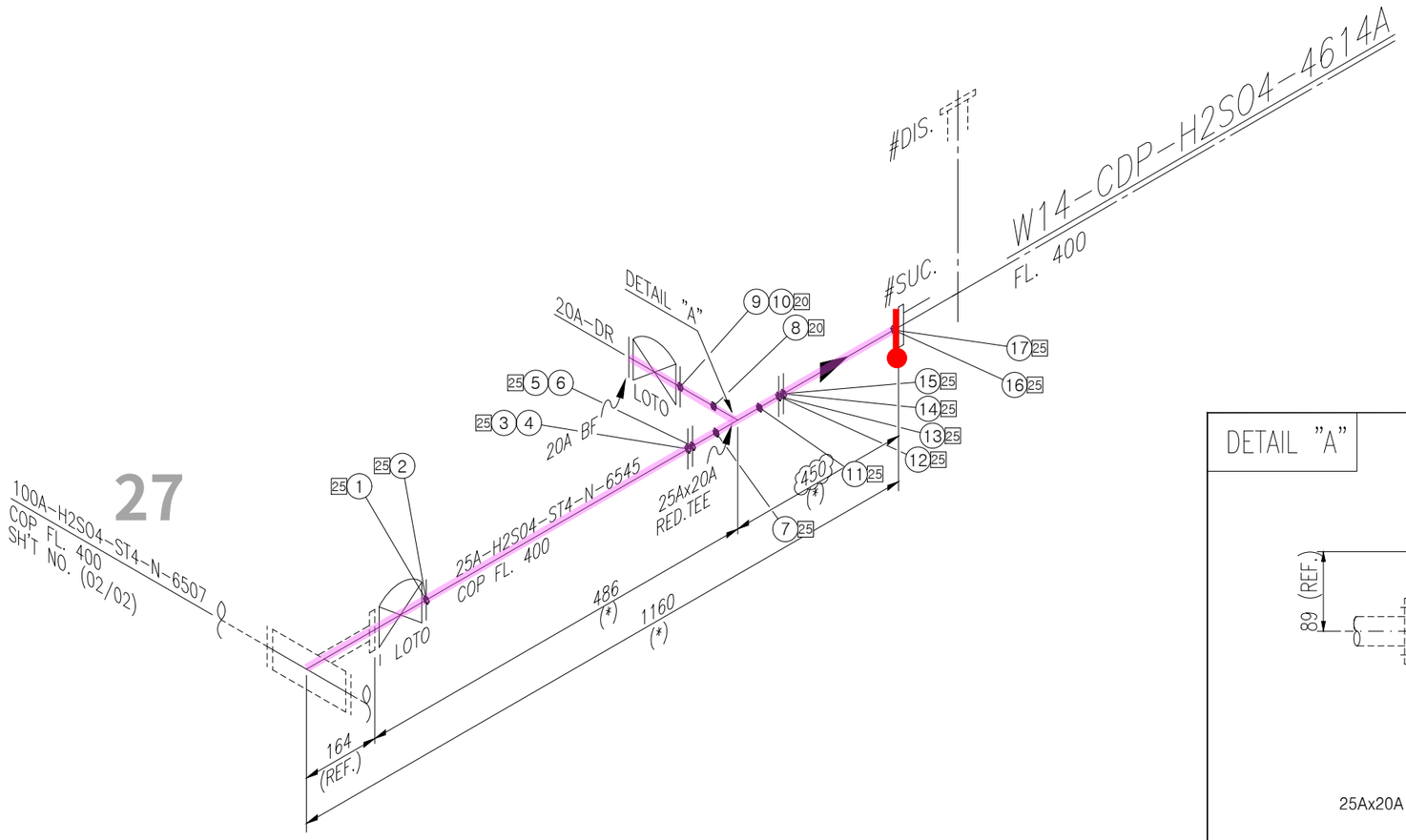

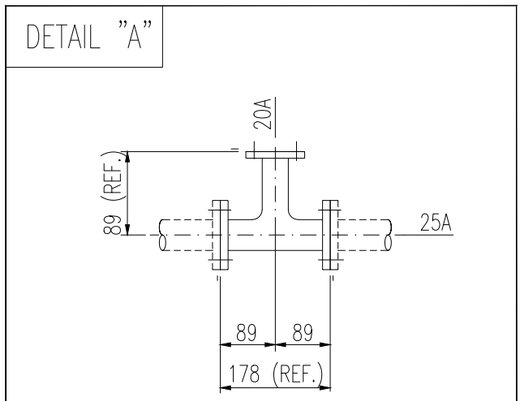

25Ax20A R.TEE W/ PTFE-LINED

상기 25Ax20A R.TEE 는 FLANGE 포함 VENDOR 공급품임.

<NOTE>
1. TRAY & ANGLE,CHANNEL SUPPORT가 적용되는 배관 ELEVATION은 현장 맞춤으로 한다.
2. (*) FIELD ADJUST

ITEM	SIZE	Q'TY	DESCRIPTION
		ST4	
P	25A	0.8M	PIPE, STS 304TP+PTFE Lined, ERW – SCH 10S
TR	25Ax20A	1EA	TEE RED, STSF304+PTFE Lined, ERW – SCH 10S
F	25A	6EA	FLG SO, KS 10K, RF, STS304+PTFE Lined
FB	20A	1EA	FLG BLIND, KS 10K, RF, STS304+PTFE Lined
G	25A	5EA	GASKET, KS 10K, RF, PTFE, 3.0MM TH'K
G	20A	2EA	GASKET, KS 10K, RF, PTFE, 3.0MM TH'K
B1	25A	5SET	MACHINE BOLT & NYLON NUTS :STS 304 / W WASHERS
B1	20A	2SET	MACHINE BOLT & NYLON NUTS :STS 304 / W WASHERS
VDLO	25A	1EA	KS 10K, RF, Teflon Lined SSC13, EPDM + PTFE Diaphragm, BB, HW
			+LOTO
VDLO	20A	1EA	KS 10K, RF, Teflon Lined SSC13, EPDM + PTFE Diaphragm, BB, HW
SH	25A	5EA	SHIELD
SH	20A	2EA	SHIELD
F	20A	1EA	FLG SO, KS 10K, RF, STS304+PTFE Lined

* PIPE : P/P1 * 90° ELBOW : E90 * 45° ELBOW : E45 * TEE : T * RED.TEE : TR * STUB-IN : STU * REINFORCING PAD : RP * CON.RED : RC * ECC.RED : RE * CON.SWAGE : RCS/RCS1 * ECC.SWAGE : RES/RES1 * NIPPLE : NP/NP1/NP2 * CAP : CAP/CAP1 * PLUG : PLG * FULL COUPLING : FC * HALF COUPLING : HF/HF1
* STUB-IN : STU * SOCKET(HDPE/PVC) : SC * SADDLE(HDPE) : SD * FLANGE : F/F1 * GASKET : G/G1/G2 * BOLT & NUT : B/B1 * BLIND FLANGE : FB/FB1 * GATE VA. : VG/VG1/VG2 * BALL VA. : VB/VBLO/VB1/VB1LO/VB2/VB2LO * BUTTERFLY VA. : VF/VF4 * CHECK VA. : VC/VC1/VC2/VC3/VC4/VC5/VC6/VC7
* GLOBE VA. : VL/VL1/VL2 * DIAPHRAGM VA. : VD/VDLO * DAMPER : VP * QUICK COUPLING : SQC * FLEXIBLE JOINT(STEEL) : FLXB * FLEXIBLE JOINT(RUBBER) : FLXR * FLEXIBLE JOINT(STEEL_PTFE LINED) : FLXL * FLEXIBLE HOSE : FLXH * STEAM TRAP : ST * SPRAY NOZZLE : SPN * EMERGENCY SHOWER : SSH
* STRAINER(Y-TYPE) : YSTR * STRAINER(T-TYPE) : TSTR * STRAINER(BUCKET-TYPE) : BSTR * ANCHOR PLATE : STOP * BIRD SCREEN : BS * ISOLATION KIT : IK * UNLOADING BOX : UB * AIR TRAP : AT * LOTO : LOTO * SIGHT GLASS : SG * PRESSURE GAUGE : PG * SHILED : SH * SPECIAL BOLT & NUT : BL/BL1

CLIENT SK hynix 15

INSULATION	CODE	N	CONDITION	PRESS. (kg/cm2g)	TEMP. (°C)
	THICK.	–	DESIGN	1.0	60
			OPERATING	ATM	AMB

AREA W14
UNIT 4FA
REF. PLAN DWG. CJ-M15W14-PI-A30-040013-A
REF. P & ID CJ-M15W14-PR-A20-000144

REV. NO.	DATE	DESCRIPTION	BY	CHK	APP'D
0	25.01.24	APPROVED FOR CONSTRUCTION	황래종	안남후	박동영

CONTRACTOR SK ecoplant
PROJECT NAME M15X Ph4 Project
COMMODITY H2SO4
JOB NO. 22330D
LINE NO. 25A-H2SO4-ST4-N-6545
SH'T NO. 01 / 01
REV. 0

경고 : 본 도면은 SK HYNIX의 기업비밀 자료로서, 어떠한 경우에도 목적 외 사용, 복제, 제3자에게 공개, 누설 및 유출할 수 없으며, 회사는 유포자의 불법 사용으로 피해가 발생할 경우 유포자에게 민/형사상 책임을 요구할 수 있음.

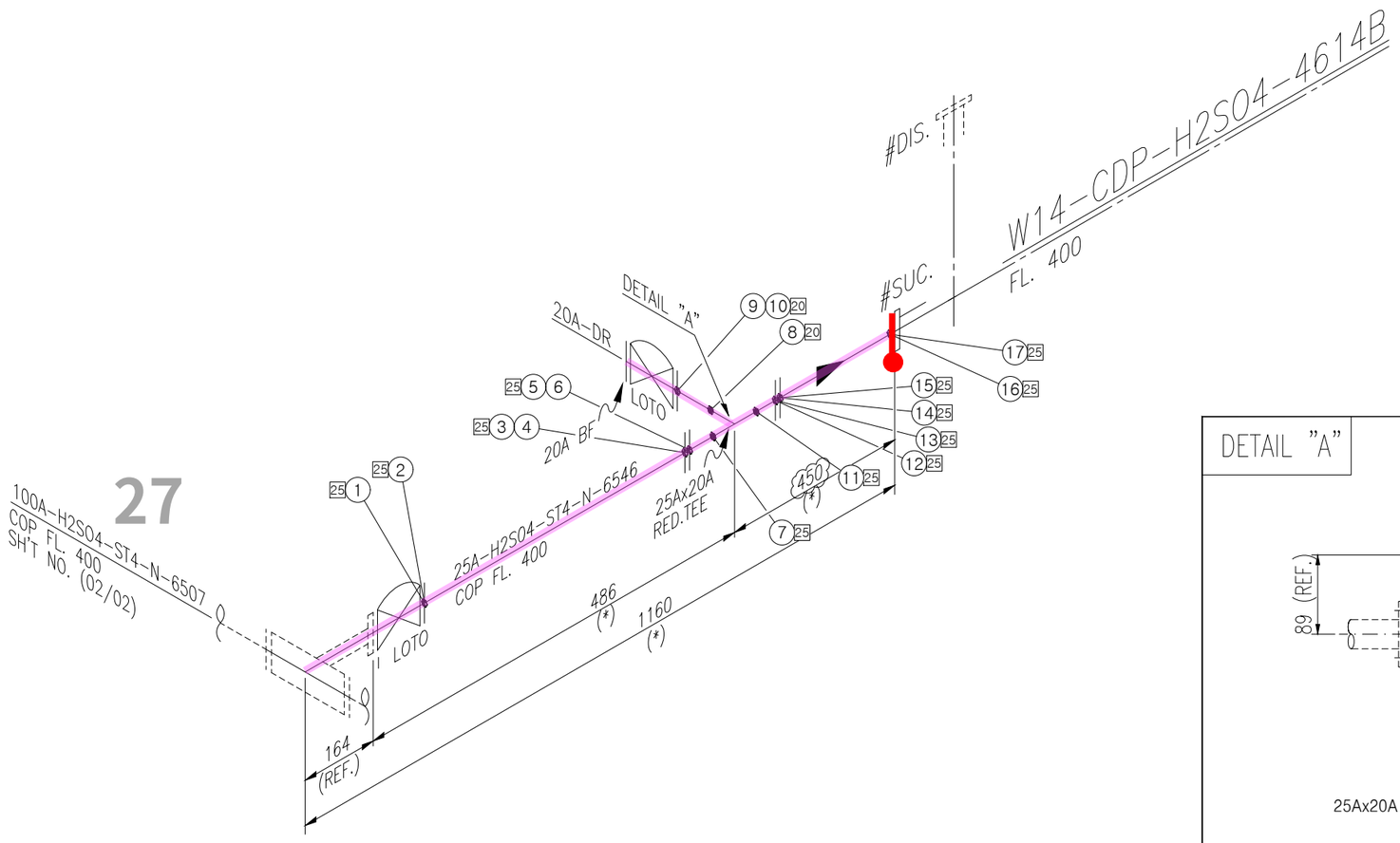

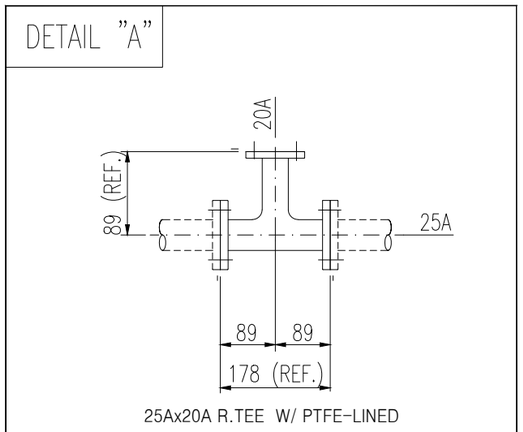

상기 25Ax20A R.TEE 는 FLANGE 포함 VENDOR 공급품임.

<NOTE>
1. TRAY & ANGLE,CHANNEL SUPPORT가 적용되는 배관 ELEVATION은 현장 맞춤으로 한다.
2. (*) FIELD ADJUST

SK ecoplant

ITEM	SIZE	Q'TY	DESCRIPTION
		ST4	
P	25A	0.8M	PIPE, STS 304TP+PTFE Lined, ERW – SCH 10S
TR	25Ax20A	1EA	TEE RED, STSF304+PTFE Lined, ERW – SCH 10S
F	25A	6EA	FLG SO, KS 10K, RF, STS304+PTFE Lined
FB	20A	1EA	FLG BLIND, KS 10K, RF, STS304+PTFE Lined
G	25A	5EA	GASKET, KS 10K, RF, PTFE, 3.0MM TH'K
G	20A	2EA	GASKET, KS 10K, RF, PTFE, 3.0MM TH'K
B1	25A	5SET	MACHINE BOLT & NYLON NUTS :STS 304 / W WASHERS
B1	20A	2SET	MACHINE BOLT & NYLON NUTS :STS 304 / W WASHERS
VDLO	25A	1EA	KS 10K, RF, Teflon Lined SSC13, EPDM + PTFE Diaphrogm, BB, HW
			+LOTO
VDLO	20A	1EA	KS 10K, RF, Teflon Lined SSC13, EPDM + PTFE Diaphrogm, BB, HW
SH	25A	5EA	SHIELD
SH	20A	2EA	SHIELD
F	20A	1EA	FLG SO, KS 10K, RF, STS304+PTFE Lined

* PIPE : P/P1 * 90° ELBOW : E90 * 45° ELBOW : E45 * TEE : T * RED.TEE : TR * STUB-IN : STU * REINFORCING PAD : RP * CON.RED : RC * ECC.RED : RE * CON.SWAGE : RCS/RCS1 * ECC.SWAGE : RES/RES1 * NIPPLE : NP/NP1/NP2 * CAP : CAP/CAP1 * PLUG : PLG * FULL COUPLING : FC * HALF COUPLING : HF/HF1
* STUB-IN : STU * SOCKET(HDPE/PVC) : SC * SADDLE(HDPE) : SD * FLANGE : F/F1 * GASKET : G/G1/G2 * BOLT & NUT : B/B1 * BLIND FLANGE : FB/FB1 * GATE VA. : VG/VG1/VG2 * BALL VA. : VB/VBLO/VB1/VB1LO/VB2/VB2LO * BUTTERFLY VA. : VF/VF4 * CHECK VA. : VC/VC1/VC2/VC3/VC4/VC5/VC6/VC7
* GLOBE VA. : VL/VL1/VL2 * DIAPHRAGM VA. : VD/VDLO * DAMPER : VP * QUICK COUPLING : SQC * FLEXIBLE JOINT(STEEL) : FLXB * FLEXIBLE JOINT(RUBBER) : FLXR * FLEXIBLE JOINT(STEEL_PTFE LINED) : FLXL * FLEXIBLE HOSE : FLXH * STEAM TRAP : ST * SPRAY NOZZLE : SPN * EMERGENCY SHOWER : SSH
* STRAINER(Y-TYPE) : YSTR * STRAINER(T-TYPE) : TSTR * STRAINER(BUCKET-TYPE) : BSTR * ANCHOR PLATE : STOP * BIRD SCREEN : BS * ISOLATION KIT : IK * UNLOADING BOX : UB * AIR TRAP : AT * LOTO : LOTO * SIGHT GLASS : SG * PRESSURE GAUGE : PG * SHILED : SH * SPECIAL BOLT & NUT : BL/BL1

CLIENT SK hynix 16

INSULATION	CODE	N	CONDITION	PRESS. (kg/cm2g)	TEMP. (°C)
	THICK.	–	DESIGN	1.0	60
			OPERATING	ATM	AMB

AREA W14
UNIT 4FA
REF. PLAN DWG. CJ-M15W14-PI-A30-040013-A
REF. P & ID CJ-M15W14-PR-A20-000144

REV. NO.	DATE	DESCRIPTION	BY	CHK	APP'D
0	25.01.24	APPROVED FOR CONSTRUCTION	황래종	안남후	박동영

CONTRACTOR SK ecoplant
PROJECT NAME M15X Ph4 Project
COMMODITY H2SO4
JOB NO. 22330D
LINE NO. 25A-H2SO4-ST4-N-6546
SH'T NO. 01 / 01
REV. 0

경고 : 본 도면은 SK HYNIX의 기업비밀 자료로서, 어떠한 경우에도 목적 외 사용, 복제, 제3자에게 공개, 누설 및 유출할 수 없으며, 회사는 유포자의 불법 사용으로 피해가 발생할 경우 유포자에게 민/형사상 책임을 요구할 수 있음.

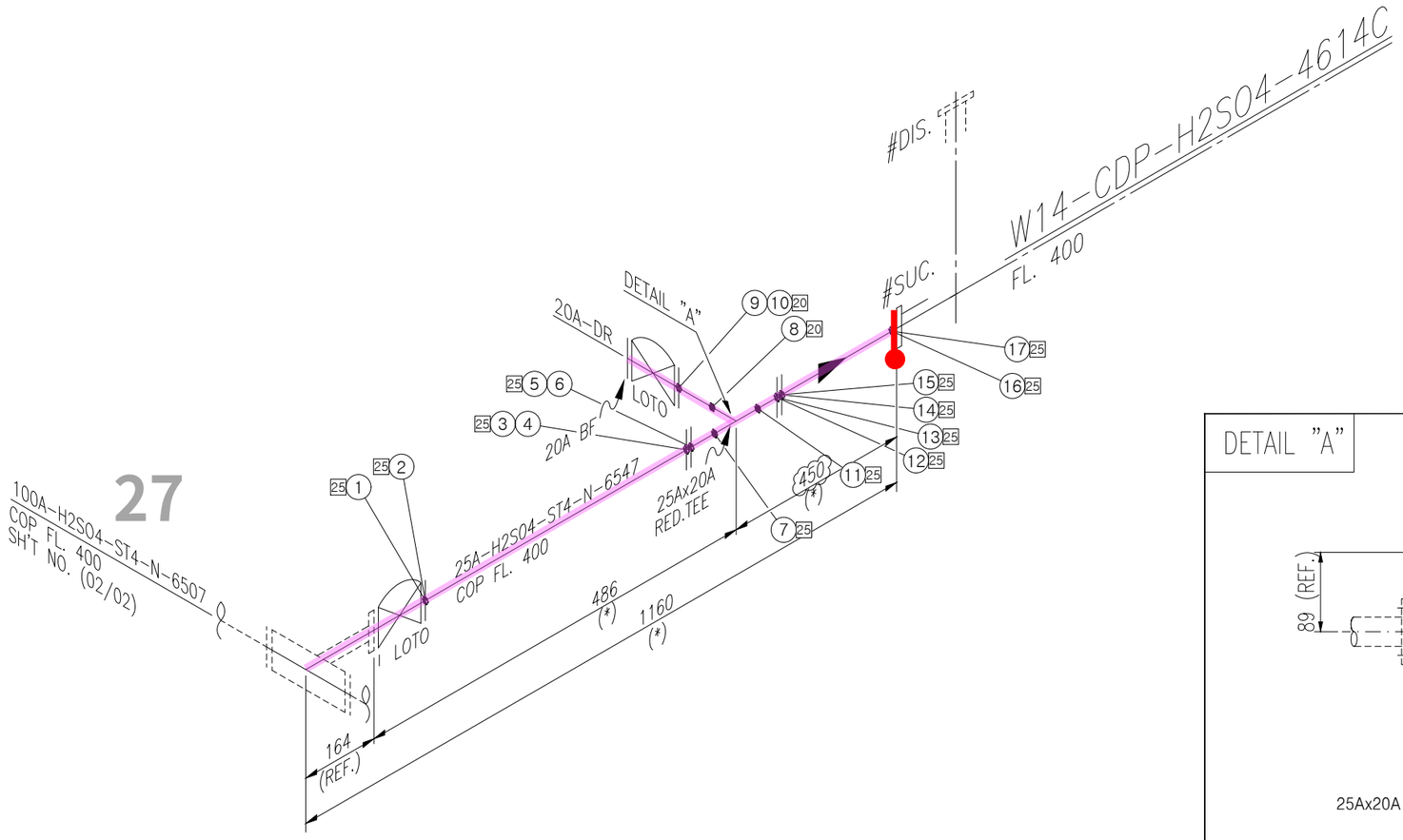

DETAIL "A"

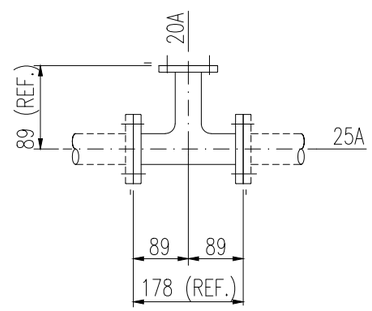

25Ax20A R.TEE W/ PTFE-LINED

상기 25Ax20A R.TEE 는 FLANGE 포함 VENDOR 공급품임.

<NOTE>
1. TRAY & ANGLE,CHANNEL SUPPORT가 적용되는 배관 ELEVATION은 현장 맞춤으로 한다.
2. (*) FIELD ADJUST

SK ecoplant

ITEM	SIZE	Q'TY	DESCRIPTION
		ST4	
P	25A	0.8M	PIPE, STS 304TP+PTFE Lined, ERW – SCH 10S
TR	25Ax20A	1EA	TEE RED, STSF304+PTFE Lined, ERW – SCH 10S
F	25A	6EA	FLG SO, KS 10K, RF, STS304+PTFE Lined
FB	20A	1EA	FLG BLIND, KS 10K, RF, STS304+PTFE Lined
G	25A	5EA	GASKET, KS 10K, RF, PTFE, 3.0MM TH'K
G	20A	2EA	GASKET, KS 10K, RF, PTFE, 3.0MM TH'K
B1	25A	5SET	MACHINE BOLT & NYLON NUTS :STS 304 / W WASHERS
B1	20A	2SET	MACHINE BOLT & NYLON NUTS :STS 304 / W WASHERS
VDLO	25A	1EA	KS 10K, RF, Teflon Lined SSC13, EPDM + PTFE Diaphragm, BB, HW
			+LOTO
VDLO	20A	1EA	KS 10K, RF, Teflon Lined SSC13, EPDM + PTFE Diaphragm, BB, HW
SH	25A	5EA	SHIELD
SH	20A	2EA	SHIELD
F	20A	1EA	FLG SO, KS 10K, RF, STS304+PTFE Lined

* PIPE : P/P1 * 90° ELBOW : E90 * 45° ELBOW : E45 * TEE : T * RED.TEE : TR * STUB-IN : STU * REINFORCING PAD : RP * CON.RED : RC * ECC.RED : RE * CON.SWAGE : RCS/RCS1 * ECC.SWAGE : RES/RES1 * NIPPLE : NP/NP1/NP2 * CAP : CAP/CAP1 * PLUG : PLG * FULL COUPLING : FC * HALF COUPLING : HF/HF1
* STUB-IN : STU * SOCKET(HDPE/PVC) : SC * SADDLE(HDPE) : SD * FLANGE : F/F1 * GASKET : G/G1/G2 * BOLT & NUT : B/B1 * BLIND FLANGE : FB/FB1 * GATE VA. : VG/VG1/VG2 * BALL VA. : VB/VBLO/VB1/VB1LO/VB2/VB2LO * BUTTERFLY VA. : VF/VF4 * CHECK VA. : VC/VC1/VC2/VC3/VC4/VC5/VC6/VC7
* GLOBE VA. : VL/VL1/VL2 * DIAPHRAGM VA. : VD/VDLO * DAMPER : VP * QUICK COUPLING : SQC * FLEXIBLE JOINT(STEEL) : FLXB * FLEXIBLE JOINT(RUBBER) : FLXR * FLEXIBLE JOINT(STEEL_PTFE LINED) : FLXL * FLEXIBLE HOSE : FLXH * STEAM TRAP : ST * SPRAY NOZZLE : SPN * EMERGENCY SHOWER : SSH
* STRAINER(Y-TYPE) : YSTR * STRAINER(T-TYPE) : TSTR * STRAINER(BUCKET-TYPE) : BSTR * ANCHOR PLATE : STOP * BIRD SCREEN : BS * ISOLATION KIT : IK * UNLOADING BOX : UB * AIR TRAP : AT * LOTO : LOTO * SIGHT GLASS : SG * PRESSURE GAUGE : PG * SHILED : SH * SPECIAL BOLT & NUT : BL/BL1

CLIENT SK hynix 17

INSULATION	CODE	N	CONDITION	PRESS. (kg/cm2g)	TEMP. (°C)
	THICK.	–	DESIGN	1.0	60
			OPERATING	ATM	AMB

AREA W14
UNIT 4FA
REF. PLAN DWG. CJ-M15W14-PI-A30-040013-A
REF. P & ID CJ-M15W14-PR-A20-000144

REV. NO.	DATE	DESCRIPTION	BY	CHK	APP'D
0	25.01.24	APPROVED FOR CONSTRUCTION	황래종	안남후	박동영

CONTRACTOR SK ecoplant
PROJECT NAME M15X Ph4 Project
COMMODITY H2SO4
JOB NO. 22330D
LINE NO. 25A-H2SO4-ST4-N-6547
SH'T NO. 01 / 01
REV. 0

경고 : 본 도면은 SK HYNIX의 기업비밀 자료로서, 어떠한 경우에도 목적 외 사용, 복제, 제3자에게 공개, 누설 및 유출할 수 없으며, 회사는 유포자의 불법 사용으로 피해가 발생할 경우 유포자에게 민/형사상 책임을 요구할 수 있음.

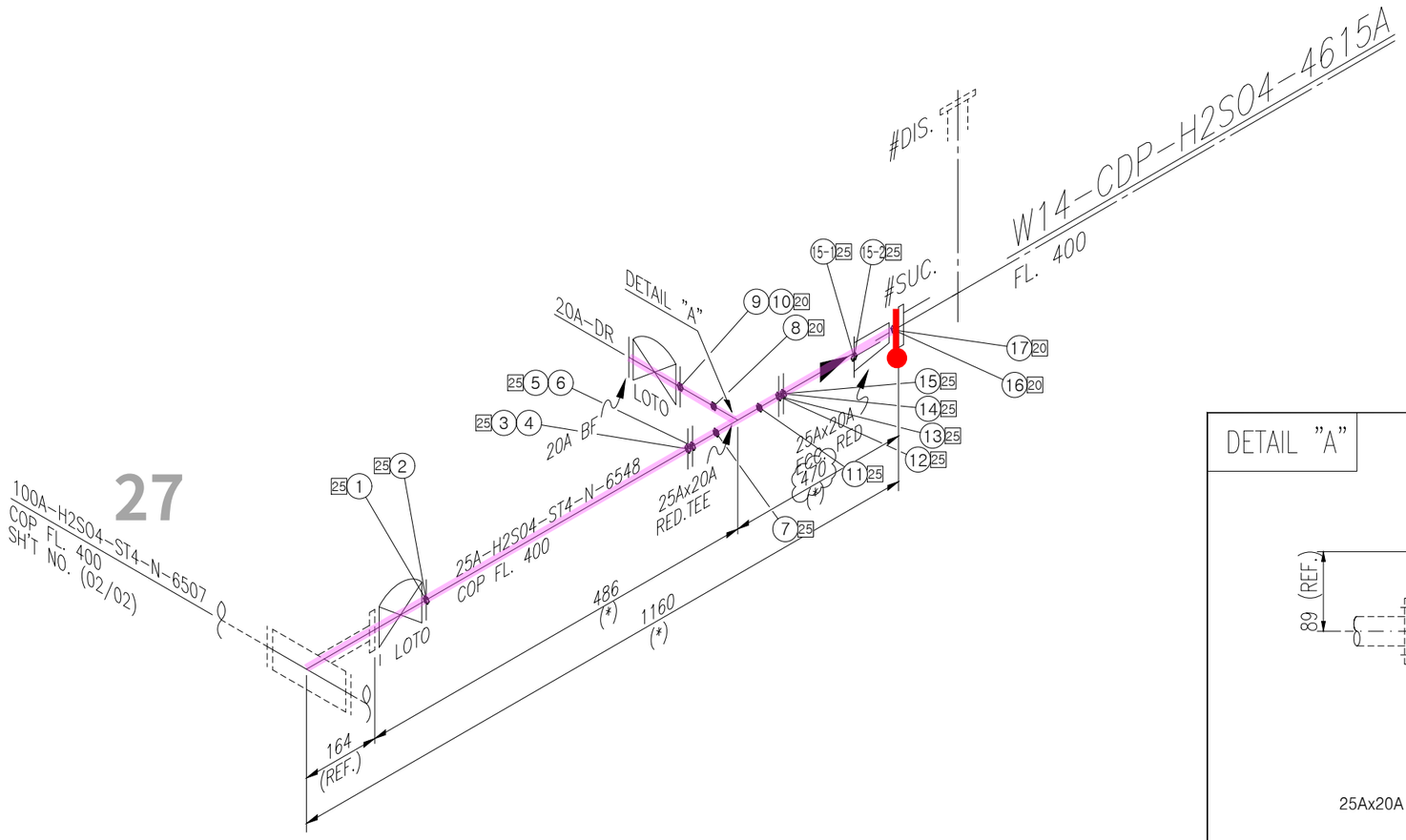

DETAIL "A"

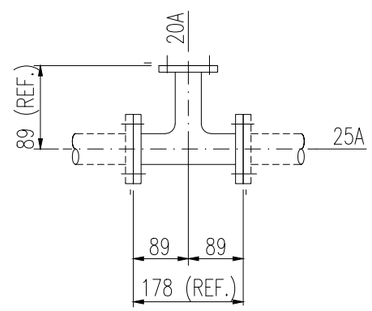

25Ax20A R.TEE W/ PTFE-LINED

상기 25Ax20A R.TEE 는 FLANGE 포함 VENDOR 공급품임.

<NOTE>
1. TRAY & ANGLE,CHANNEL SUPPORT가 적용되는 배관 ELEVATION은 현장 맞춤으로 한다.
2. (*) FIELD ADJUST

SK ecoplant

ITEM	SIZE	Q'TY	DESCRIPTION
		ST4	
P	25A	0.8M	PIPE, STS 304TP+PTFE Lined, ERW – SCH 10S
TR	25Ax20A	1EA	TEE RED, STSF304+PTFE Lined, ERW – SCH 10S
F	25A	6EA	FLG SO, KS 10K, RF, STS304+PTFE Lined
FB	20A	1EA	FLG BLIND, KS 10K, RF, STS304+PTFE Lined
G	25A	5EA	GASKET, KS 10K, RF, PTFE, 3.0MM TH'K
G	20A	2EA	GASKET, KS 10K, RF, PTFE, 3.0MM TH'K
B1	25A	5SET	MACHINE BOLT & NYLON NUTS :STS 304 / W WASHERS
B1	20A	2SET	MACHINE BOLT & NYLON NUTS :STS 304 / W WASHERS
VDLO	25A	1EA	KS 10K, RF, Teflon Lined SSC13, EPDM + PTFE Diaphragm, BB, HW
			+LOTO
VDLO	20A	1EA	KS 10K, RF, Teflon Lined SSC13, EPDM + PTFE Diaphragm, BB, HW
SH	25A	5EA	SHIELD
SH	20A	2EA	SHIELD
F	20A	1EA	FLG SO, KS 10K, RF, STS304+PTFE Lined
RE	25Ax20A	1EA	ECC. RED, STSF304+PTFE Lined, ERW – SCH 10S

* PIPE : P/P1 * 90° ELBOW : E90 * 45° ELBOW : E45 * TEE : T * RED.TEE : TR * STUB-IN : STU * REINFORCING PAD : RP * CON.RED : RC * ECC.RED : RE * CON.SWAGE : RCS/RCS1 * ECC.SWAGE : RES/RES1 * NIPPLE : NP/NP1/NP2 * CAP : CAP/CAP1 * PLUG : PLG * FULL COUPLING : FC * HALF COUPLING : HF/HF1
* STUB-IN : STU * SOCKET(HDPE/PVC) : SC * SADDLE(HDPE) : SD * FLANGE : F/F1 * GASKET : G/G1/G2 * BOLT & NUT : B/B1 * BLIND FLANGE : FB/FB1 * GATE VA. : VG/VG1/VG2 * BALL VA. : VB/VBLO/VB1/VB1LO/VB2/VB2LO * BUTTERFLY VA. : VF/VF4 * CHECK VA. : VC/VC1/VC2/VC3/VC4/VC5/VC6/VC7
* GLOBE VA. : VL/VL1/VL2 * DIAPHRAGM VA. : VD/VDLO * DAMPER : VP * QUICK COUPLING : SQC * FLEXIBLE JOINT(STEEL) : FLXB * FLEXIBLE JOINT(RUBBER) : FLXR * FLEXIBLE JOINT(STEEL_PTFE LINED) : FLXL * FLEXIBLE HOSE : FLXH * STEAM TRAP : ST * SPRAY NOZZLE : SPN * EMERGENCY SHOWER : SSH
* STRAINER(Y-TYPE) : YSTR * STRAINER(T-TYPE) : TSTR * STRAINER(BUCKET-TYPE) : BSTR * ANCHOR PLATE : STOP * BIRD SCREEN : BS * ISOLATION KIT : IK * UNLOADING BOX : UB * AIR TRAP : AT * LOTO : LOTO * SIGHT GLASS : SG * PRESSURE GAUGE : PG * SHILED : SH * SPECIAL BOLT & NUT : BL/BL1

CLIENT SK hynix 18

INSULATION	CODE	N	CONDITION	PRESS. (kg/cm2g)	TEMP. (°C)
	THICK.	–	DESIGN	1.0	60
			OPERATING	ATM	AMB

AREA W14
UNIT 4FA
REF. PLAN DWG. CJ-M15W14-PI-A30-040013-A
REF. P & ID CJ-M15W14-PR-A20-000146

REV. NO.	DATE	DESCRIPTION	BY	CHK	APP'D
0	25.01.24	APPROVED FOR CONSTRUCTION	황래종	안남후	박동영

CONTRACTOR SK ecoplant
PROJECT NAME M15X Ph4 Project
COMMODITY H2SO4
JOB NO. 22330D
LINE NO. 25A-H2SO4-ST4-N-6548
SH'T NO. 01 / 01
REV. 0

경고 : 본 도면은 SK HYNIX의 기업비밀 자료로서, 어떠한 경우에도 목적 외 사용, 복제, 제3자에게 공개, 누설 및 유출할 수 없으며, 회사는 유포자의 불법 사용으로 피해가 발생할 경우 유포자에게 민/형사상 책임을 요구할 수 있음.

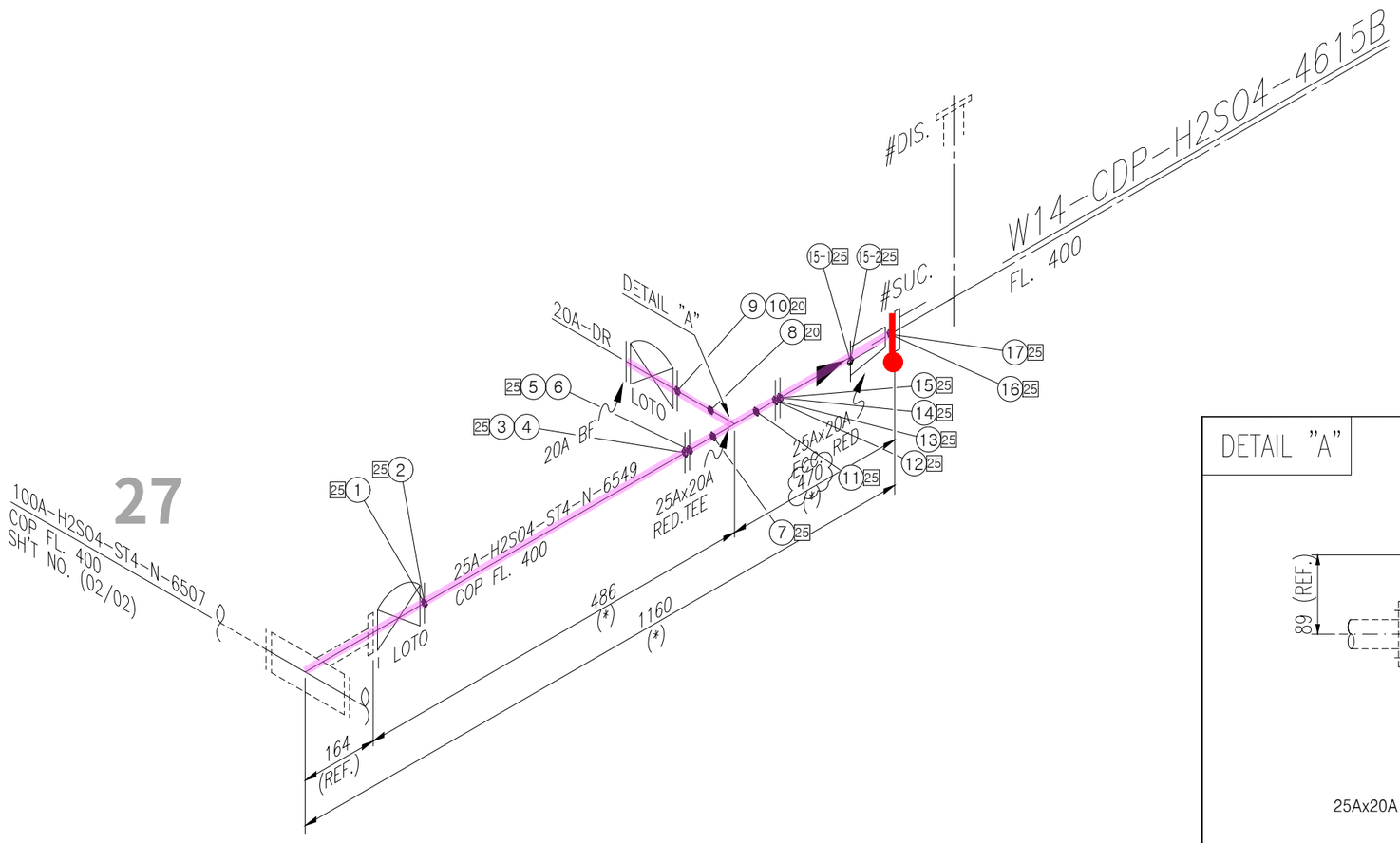

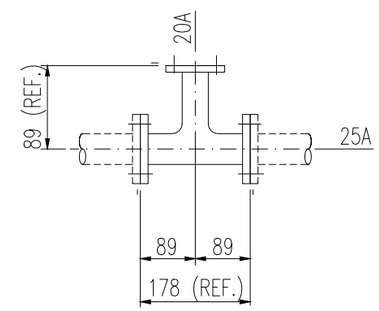

25Ax20A R.TEE W/ PTFE-LINED

상기 25Ax20A R.TEE 는 FLANGE 포함 VENDOR 공급품임.

<NOTE>
1. TRAY & ANGLE,CHANNEL SUPPORT가 적용되는 배관 ELEVATION은 현장 맞춤으로 한다.
2. (*) FIELD ADJUST

SK ecoplant

ITEM	SIZE	Q'TY	DESCRIPTION
		ST4	
P	25A	0.8M	PIPE, STS 304TP+PTFE Lined, ERW – SCH 10S
TR	25Ax20A	1EA	TEE RED, STSF304+PTFE Lined, ERW – SCH 10S
F	25A	6EA	FLG SO, KS 10K, RF, STS304+PTFE Lined
FB	20A	1EA	FLG BLIND, KS 10K, RF, STS304+PTFE Lined
G	25A	5EA	GASKET, KS 10K, RF, PTFE, 3.0MM TH'K
G	20A	2EA	GASKET, KS 10K, RF, PTFE, 3.0MM TH'K
B1	25A	5SET	MACHINE BOLT & NYLON NUTS :STS 304 / W WASHERS
B1	20A	2SET	MACHINE BOLT & NYLON NUTS :STS 304 / W WASHERS
VDLO	25A	1EA	KS 10K, RF, Teflon Lined SSC13, EPDM + PTFE Diaphragm, BB, HW
			+LOTO
VDLO	20A	1EA	KS 10K, RF, Teflon Lined SSC13, EPDM + PTFE Diaphragm, BB, HW
SH	25A	5EA	SHIELD
SH	20A	2EA	SHIELD
F	20A	1EA	FLG SO, KS 10K, RF, STS304+PTFE Lined
RE	25Ax20A	1EA	ECC. RED, STSF304+PTFE Lined, ERW – SCH 10S

* PIPE : P/P1 * 90° ELBOW : E90 * 45° ELBOW : E45 * TEE : T * RED.TEE : TR * STUB-IN : STU * REINFORCING PAD : RP * CON.RED : RC * ECC.RED : RE * CON.SWAGE : RCS/RCS1 * ECC.SWAGE : RES/RES1 * NIPPLE : NP/NP1/NP2 * CAP : CAP/CAP1 * PLUG : PLG * FULL COUPLING : FC * HALF COUPLING : HF/HF1
* STUB-IN : STU * SOCKET(HDPE/PVC) : SC * SADDLE(HDPE) : SD * FLANGE : F/F1 * GASKET : G/G1/G2 * BOLT & NUT : B/B1 * BLIND FLANGE : FB/FB1 * GATE VA. : VG/VG1/VG2 * BALL VA. : VB/VBLO/VB1/VB1LO/VB2/VB2LO * BUTTERFLY VA. : VF/VF4 * CHECK VA. : VC/VC1/VC2/VC3/VC4/VC5/VC6/VC7
* GLOBE VA. : VL/VL1/VL2 * DIAPHRAGM VA. : VD/VDLO * DAMPER : VP * QUICK COUPLING : SQC * FLEXIBLE JOINT(STEEL) : FLXB * FLEXIBLE JOINT(RUBBER) : FLXR * FLEXIBLE JOINT(STEEL_PTFE LINED) : FLXL * FLEXIBLE HOSE : FLXH * STEAM TRAP : ST * SPRAY NOZZLE : SPN * EMERGENCY SHOWER : SSH
* STRAINER(Y-TYPE) : YSTR * STRAINER(T-TYPE) : TSTR * STRAINER(BUCKET-TYPE) : BSTR * ANCHOR PLATE : STOP * BIRD SCREEN : BS * ISOLATION KIT : IK * UNLOADING BOX : UB * AIR TRAP : AT * LOTO : LOTO * SIGHT GLASS : SG * PRESSURE GAUGE : PG * SHILED : SH * SPECIAL BOLT & NUT : BL/BL1

CLIENT SK hynix 19

INSULATION	CODE	N	CONDITION	PRESS. (kg/cm2g)	TEMP. (°C)
	THICK.	–	DESIGN	1.0	60
			OPERATING	ATM	AMB

AREA W14
UNIT 4FA
REF. PLAN DWG. CJ-M15W14-PI-A30-040013-A
REF. P & ID CJ-M15W14-PR-A20-000146

REV. NO.	DATE	DESCRIPTION	BY	CHK	APP'D
0	25.01.24	APPROVED FOR CONSTRUCTION	황래종	안남후	박동영

CONTRACTOR SK ecoplant
PROJECT NAME M15X Ph4 Project
COMMODITY H2SO4
JOB NO. 22330D
LINE NO. 25A-H2SO4-ST4-N-6549
SH'T NO. 01 / 01
REV. 0

경고 : 본 도면은 SK HYNIX의 기업비밀 자료로서, 어떠한 경우에도 목적 외 사용, 복제, 제3자에게 공개, 누설 및 유출할 수 없으며, 회사는 유포자의 불법 사용으로 피해가 발생할 경우 유포자에게 민/형사상 책임을 요구할 수 있음.

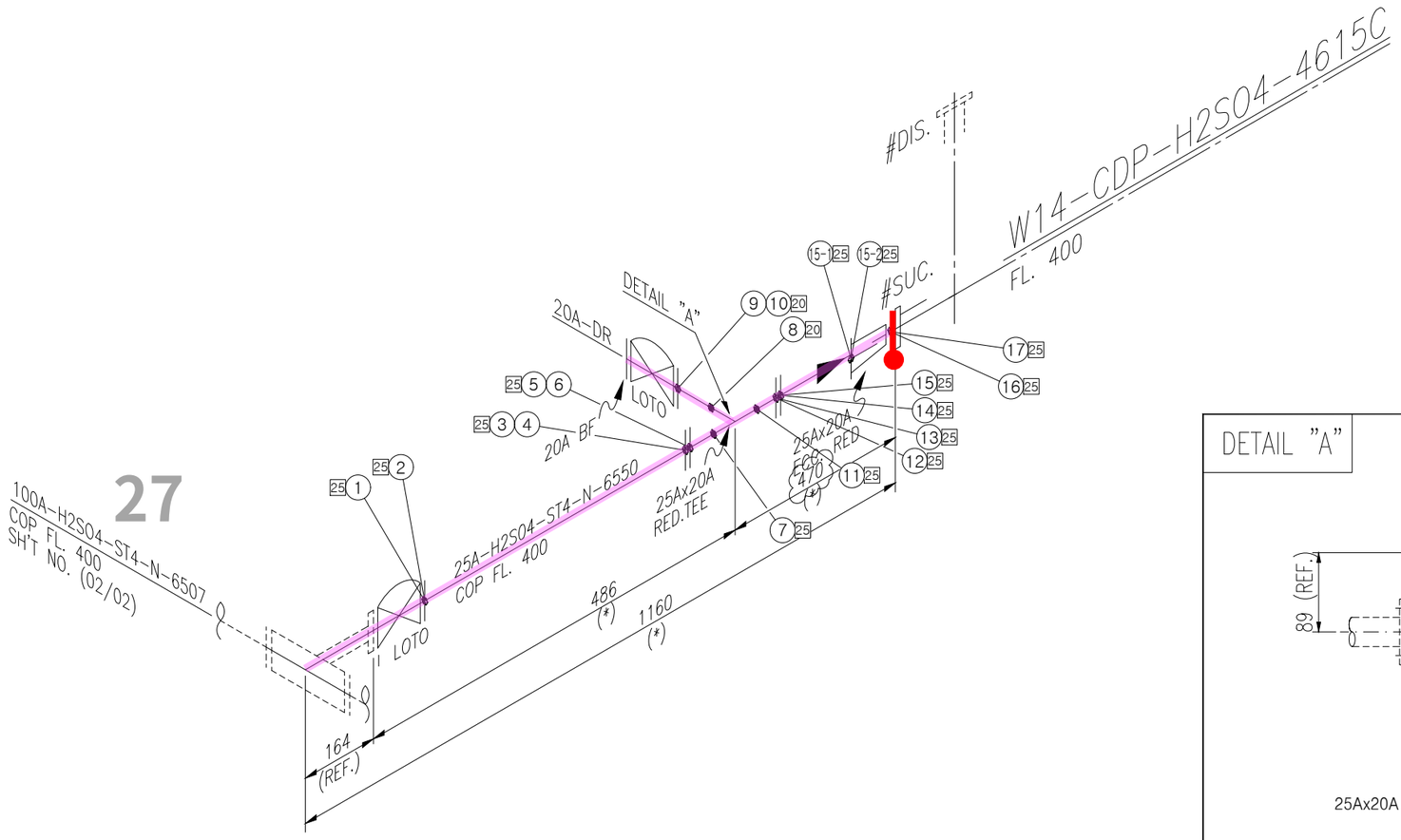

DETAIL "A"

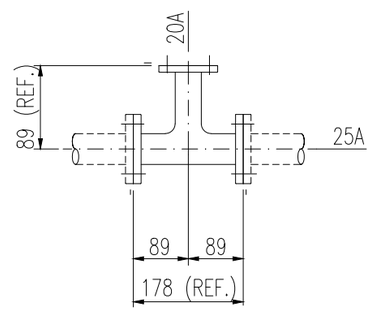

25Ax20A R.TEE W/ PTFE-LINED

상기 25Ax20A R.TEE 는 FLANGE 포함 VENDOR 공급품임.

<NOTE>
1. TRAY & ANGLE,CHANNEL SUPPORT가 적용되는 배관 ELEVATION은 현장 맞춤으로 한다.
2. (*) FIELD ADJUST

SK ecoplant

ITEM	SIZE	Q'TY	DESCRIPTION
		ST4	
P	25A	0.8M	PIPE, STS 304TP+PTFE Lined, ERW - SCH 10S
TR	25Ax20A	1EA	TEE RED, STSF304+PTFE Lined, ERW - SCH 10S
F	25A	6EA	FLG SO, KS 10K, RF, STS304+PTFE Lined
FB	20A	1EA	FLG BLIND, KS 10K, RF, STS304+PTFE Lined
G	25A	5EA	GASKET, KS 10K, RF, PTFE, 3.0MM TH'K
G	20A	2EA	GASKET, KS 10K, RF, PTFE, 3.0MM TH'K
B1	25A	5SET	MACHINE BOLT & NYLON NUTS :STS 304 / W WASHERS
B1	20A	2SET	MACHINE BOLT & NYLON NUTS :STS 304 / W WASHERS
VDLO	25A	1EA	KS 10K, RF, Teflon Lined SSC13, EPDM + PTFE Diaphragm, BB, HW
			+LOTO
VDLO	20A	1EA	KS 10K, RF, Teflon Lined SSC13, EPDM + PTFE Diaphragm, BB, HW
SH	25A	5EA	SHIELD
SH	20A	2EA	SHIELD
F	20A	1EA	FLG SO, KS 10K, RF, STS304+PTFE Lined
RE	25Ax20A	1EA	ECC. RED, STSF304+PTFE Lined, ERW - SCH 10S

* PIPE : P/P1 * 90° ELBOW : E90 * 45° ELBOW : E45 * TEE : T * RED.TEE : TR * STUB-IN : STU * REINFORCING PAD : RP * CON.RED : RC * ECC.RED : RE * CON.SWAGE : RCS/RCS1 * ECC.SWAGE : RES/RES1 * NIPPLE : NP/NP1/NP2 * CAP : CAP/CAP1 * PLUG : PLG * FULL COUPLING : FC * HALF COUPLING : HF/HF1
* STUB-IN : STU * SOCKET(HDPE/PVC) : SC * SADDLE(HDPE) : SD * FLANGE : F/F1 * GASKET : G/G1/G2 * BOLT & NUT : B/B1 * BLIND FLANGE : FB/FB1 * GATE VA. : VG/VG1/VG2 * BALL VA. : VB/VBLO/VB1/VB1LO/VB2/VB2LO * BUTTERFLY VA. : VF/VF4 * CHECK VA. : VC/VC1/VC2/VC3/VC4/VC5/VC6/VC7
* GLOBE VA. : VL/VL1/VL2 * DIAPHRAGM VA. : VD/VDLO * DAMPER : VP * QUICK COUPLING : SQC * FLEXIBLE JOINT(STEEL) : FLXB * FLEXIBLE JOINT(RUBBER) : FLXR * FLEXIBLE JOINT(STEEL_PTFE LINED) : FLXL * FLEXIBLE HOSE : FLXH * STEAM TRAP : ST * SPRAY NOZZLE : SPN * EMERGENCY SHOWER : SSH
* STRAINER(Y-TYPE) : YSTR * STRAINER(T-TYPE) : TSTR * STRAINER(BUCKET-TYPE) : BSTR * ANCHOR PLATE : STOP * BIRD SCREEN : BS * ISOLATION KIT : IK * UNLOADING BOX : UB * AIR TRAP : AT * LOTO : LOTO * SIGHT GLASS : SG * PRESSURE GAUGE : PG * SHILED : SH * SPECIAL BOLT & NUT : BL/BL1

CLIENT SK hynix 20

INSULATION	CODE	N	CONDITION	PRESS. (kg/cm2g)	TEMP. (°C)
	THICK.	-	DESIGN	1.0	60
			OPERATING	ATM	AMB

AREA W14
UNIT 4FA
REF. PLAN DWG. CJ-M15W14-PI-A30-040013-A
REF. P & ID CJ-M15W14-PR-A20-000146

REV. NO.	DATE	DESCRIPTION	BY	CHK	APP'D
0	25.01.24	APPROVED FOR CONSTRUCTION	황래종	안남후	박동영

CONTRACTOR SK ecoplant
PROJECT NAME M15X Ph4 Project
COMMODITY H2SO4
JOB NO. 22330D
LINE NO. 25A-H2SO4-ST4-N-6550
SH'T NO. 01 / 01
REV. 0

경고 : 본 도면은 SK HYNIX의 기업비밀 자료로서, 어떠한 경우에도 목적 외 사용, 복제, 제3자에게 공개, 누설 및 유출할 수 없으며, 회사는 유포자의 불법 사용으로 피해가 발생할 경우 유포자에게 민/형사상 책임을 요구할 수 있음.

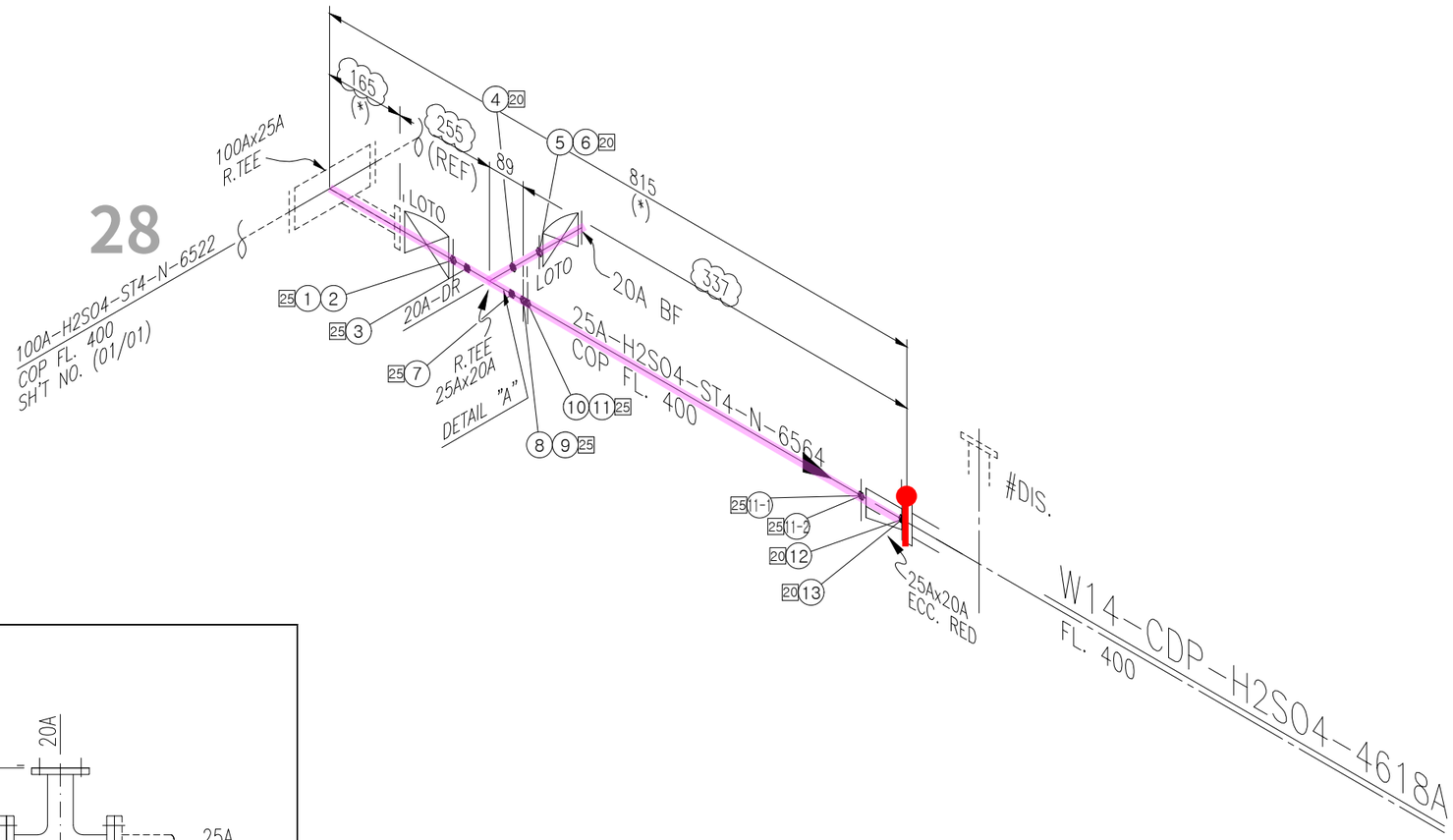

DETAIL "A"

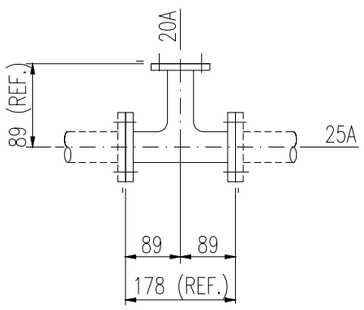

25Ax20A R.TEE W/ PTFE-LINED

상기 25Ax20A R.TEE 는 FLANGE 포함 VENDOR 공급품임.

<NOTE>
1. TRAY & ANGLE,CHANNEL SUPPORT가 적용되는 배관 ELEVATION은 현장 맞춤으로 한다.
2. (*) FIELD ADJUST

SK ecoplant

ITEM	SIZE	Q'TY	DESCRIPTION
		ST4	
P	25A	0.4M	PIPE, STS 304TP+PTFE Lined, ERW – SCH 10S
TR	25Ax20A	1EA	TEE RED, STSF304+PTFE Lined, ERW – SCH 10S
VDLO	25A	1EA	KS 10K, RF, Teflon Lined SSC13, EPDM + PTFE Diaphragm, BB, HW
			+LOTO
VDLO	20A	1EA	KS 10K, RF, Teflon Lined SSC13, EPDM + PTFE Diaphragm, BB, HW
			+LOTO
F	25A	4EA	FLG , KS 10K, RF, STS304+PTFE Lined
FB	20A	1EA	FLG BLIND, KS 10K, RF, STS304+PTFE Lined
G	25A	5EA	GASKET, KS 10K, RF, PTFE, 3.0MM TH'K
G	20A	3EA	GASKET, KS 10K, RF, PTFE, 3.0MM TH'K
B1	25A	4SET	MACHINE BOLT & NYLON NUTS :STS 304 / W WASHERS
B1	20A	3SET	MACHINE BOLT & NYLON NUTS :STS 304 / W WASHERS
SH	25A	4EA	SHIELD
SH	20A	2EA	SHIELD
F	20A	2EA	FLG , KS 10K, RF, STS304+PTFE Lined
RE	25Ax20A	1EA	ECC. RED, STSF304+PTFE Lined, ERW – SCH 10S

* PIPE : P/P1 * 90° ELBOW : E90 * 45° ELBOW : E45 * TEE : T * RED.TEE : TR * STUB-IN : STU * REINFORCING PAD : RP * CON.RED : RC * ECC.RED : RE * CON.SWAGE : RCS/RCS1 * ECC.SWAGE : RES/RES1 * NIPPLE : NP/NP1/NP2 * CAP : CAP/CAP1 * PLUG : PLG * FULL COUPLING : FC * HALF COUPLING : HF/HF1
* STUB-IN : STU * SOCKET(HDPE/PVC) : SC * SADDLE(HDPE) : SD * FLANGE : F/F1 * GASKET : G/G1/G2 * BOLT & NUT : B/B1 * BLIND FLANGE : FB/FB1 * GATE VA. : VG/VG1/VG2 * BALL VA. : VB/VBLO/VB1/VB1LO/VB2/VB2LO * BUTTERFLY VA. : VF/VF4 * CHECK VA. : VC/VC1/VC2/VC3/VC4/VC5/VC6/VC7
* GLOBE VA. : VL/VL1/VL2 * DIAPHRAGM VA. : VD/VDLO * DAMPER : VP * QUICK COUPLING : SQC * FLEXIBLE JOINT(STEEL) : FLXB * FLEXIBLE JOINT(RUBBER) : FLXR * FLEXIBLE JOINT(STEEL_PTFE LINED) : FLXL * FLEXIBLE HOSE : FLXH * STEAM TRAP : ST * SPRAY NOZZLE : SPN * EMERGENCY SHOWER : SSH
* STRAINER(Y-TYPE) : YSTR * STRAINER(T-TYPE) : TSTR * STRAINER(BUCKET-TYPE) : BSTR * ANCHOR PLATE : STOP * BIRD SCREEN : BS * ISOLATION KIT : IK * UNLOADING BOX : UB * AIR TRAP : AT * LOTO : LOTO * SIGHT GLASS : SG * PRESSURE GAUGE : PG * SHILED : SH * SPECIAL BOLT & NUT : BL/BL1

CLIENT SK hynix 21

INSULATION	CODE	N	CONDITION	PRESS. (kg/cm2g)	TEMP. (°C)
	THICK.	–	DESIGN	1.0	60
			OPERATING	ATM	AMB

AREA W14
UNIT 4FA
REF. PLAN DWG. CJ-M15W14-PI-A30-040013-A
REF. P & ID CJ-M15W14-PR-A20-000147

REV. NO.	DATE	DESCRIPTION	BY	CHK	APP'D
0	25.01.24	APPROVED FOR CONSTRUCTION	황래종	안남후	박동영

CONTRACTOR SK ecoplant
PROJECT NAME M15X Ph4 Project
COMMODITY H2S04
JOB NO. 22330D
LINE NO. 25A-H2S04-ST4-N-6564
SH'T NO. 01 / 01
REV. 0

경고 : 본 도면은 SK HYNIX의 기업비밀 자료로서, 어떠한 경우에도 목적 외 사용, 복제, 제3자에게 공개, 누설 및 유출할 수 없으며, 회사는 유포자의 불법 사용으로 피해가 발생할 경우 유포자에게 민/형사상 책임을 요구할 수 있음.

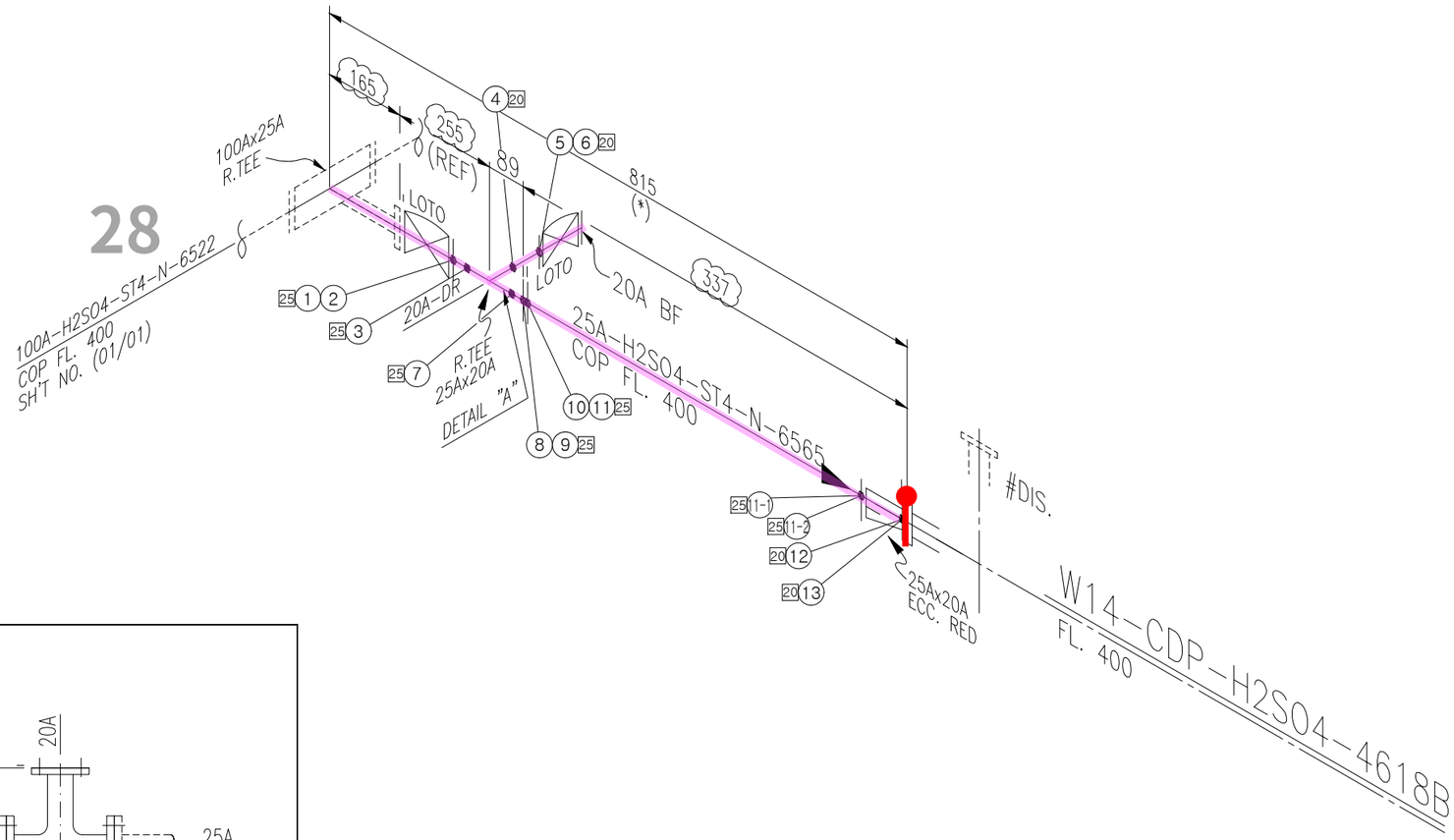

DETAIL "A"

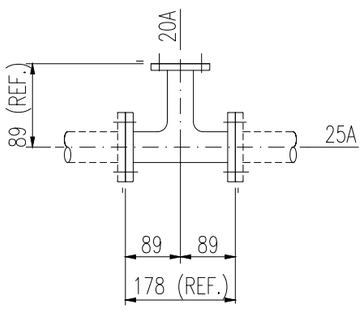

25Ax20A R.TEE W/ PTFE-LINED

상기 25Ax20A R.TEE 는 FLANGE 포함 VENDOR 공급품임.

<NOTE>
1. TRAY & ANGLE,CHANNEL SUPPORT가 적용되는 배관 ELEVATION은 현장 맞춤으로 한다.
2. (*) FIELD ADJUST

SK ecoplant

ITEM	SIZE	Q'TY	DESCRIPTION
		ST4	
P	25A	0.4M	PIPE, STS 304TP+PTFE Lined, ERW – SCH 10S
TR	25Ax20A	1EA	TEE RED, STSF304+PTFE Lined, ERW – SCH 10S
VDLO	25A	1EA	KS 10K, RF, Teflon Lined SSC13, EPDM + PTFE Diaphragm, BB, HW
			+LOTO
VDLO	20A	1EA	KS 10K, RF, Teflon Lined SSC13, EPDM + PTFE Diaphragm, BB, HW
			+LOTO
F	25A	4EA	FLG , KS 10K, RF, STS304+PTFE Lined
FB	20A	1EA	FLG BLIND, KS 10K, RF, STS304+PTFE Lined
G	25A	4EA	GASKET, KS 10K, RF, PTFE, 3.0MM TH'K
G	20A	2EA	GASKET, KS 10K, RF, PTFE, 3.0MM TH'K
B1	25A	4SET	MACHINE BOLT & NYLON NUTS :STS 304 / W WASHERS
B1	20A	2SET	MACHINE BOLT & NYLON NUTS :STS 304 / W WASHERS
SH	25A	4EA	SHIELD
SH	20A	2EA	SHIELD
F	20A	1EA	FLG , KS 10K, RF, STS304+PTFE Lined
RE	25Ax20A	1EA	ECC. RED, STSF304+PTFE Lined, ERW – SCH 10S

* PIPE : P/P1 * 90° ELBOW : E90 * 45° ELBOW : E45 * TEE : T * RED.TEE : TR * STUB-IN : STU * REINFORCING PAD : RP * CON.RED : RC * ECC.RED : RE * CON.SWAGE : RCS/RCS1 * ECC.SWAGE : RES/RES1 * NIPPLE : NP/NP1/NP2 * CAP : CAP/CAP1 * PLUG : PLG * FULL COUPLING : FC * HALF COUPLING : HF/HF1
* STUB-IN : STU * SOCKET(HDPE/PVC) : SC * SADDLE(HDPE) : SD * FLANGE : F/F1 * GASKET : G/G1/G2 * BOLT & NUT : B/B1 * BLIND FLANGE : FB/FB1 * GATE VA. : VG/VG1/VG2 * BALL VA. : VB/VBLO/VB1/VB1LO/VB2/VB2LO * BUTTERFLY VA. : VF/VF4 * CHECK VA. : VC/VC1/VC2/VC3/VC4/VC5/VC6/VC7
* GLOBE VA. : VL/VL1/VL2 * DIAPHRAGM VA. : VD/VDLO * DAMPER : VP * QUICK COUPLING : SQC * FLEXIBLE JOINT(STEEL) : FLXB * FLEXIBLE JOINT(RUBBER) : FLXR * FLEXIBLE JOINT(STEEL_PTFE LINED) : FLXL * FLEXIBLE HOSE : FLXH * STEAM TRAP : ST * SPRAY NOZZLE : SPN * EMERGENCY SHOWER : SSH
* STRAINER(Y-TYPE) : YSTR * STRAINER(T-TYPE) : TSTR * STRAINER(BUCKET-TYPE) : BSTR * ANCHOR PLATE : STOP * BIRD SCREEN : BS * ISOLATION KIT : IK * UNLOADING BOX : UB * AIR TRAP : AT * LOTO : LOTO * SIGHT GLASS : SG * PRESSURE GAUGE : PG * SHILED : SH * SPECIAL BOLT & NUT : BL/BL1

CLIENT SK hynix 22

INSULATION	CODE	N	CONDITION	PRESS. (kg/cm2g)	TEMP. (°C)
	THICK.	–	DESIGN	1.0	60
			OPERATING	ATM	AMB

AREA W14
UNIT 4FA
REF. PLAN DWG. CJ-M15W14-PI-A30-040013-A
REF. P & ID CJ-M15W14-PR-A20-000147

REV. NO.	DATE	DESCRIPTION	BY	CHK	APP'D
0	25.01.24	APPROVED FOR CONSTRUCTION	황래종	안남후	박동영

CONTRACTOR SK ecoplant
PROJECT NAME M15X Ph4 Project
COMMODITY H2S04
JOB NO. 22330D
LINE NO. 25A-H2S04-ST4-N-6565
SH'T NO. 01 / 01
REV. 0

경고 : 본 도면은 SK HYNIX의 기업비밀 자료로서, 어떠한 경우에도 목적 외 사용, 복제, 제3자에게 공개, 누설 및 유출할 수 없으며, 회사는 유포자의 불법 사용으로 피해가 발생할 경우 유포자에게 민/형사상 책임을 요구할 수 있음.

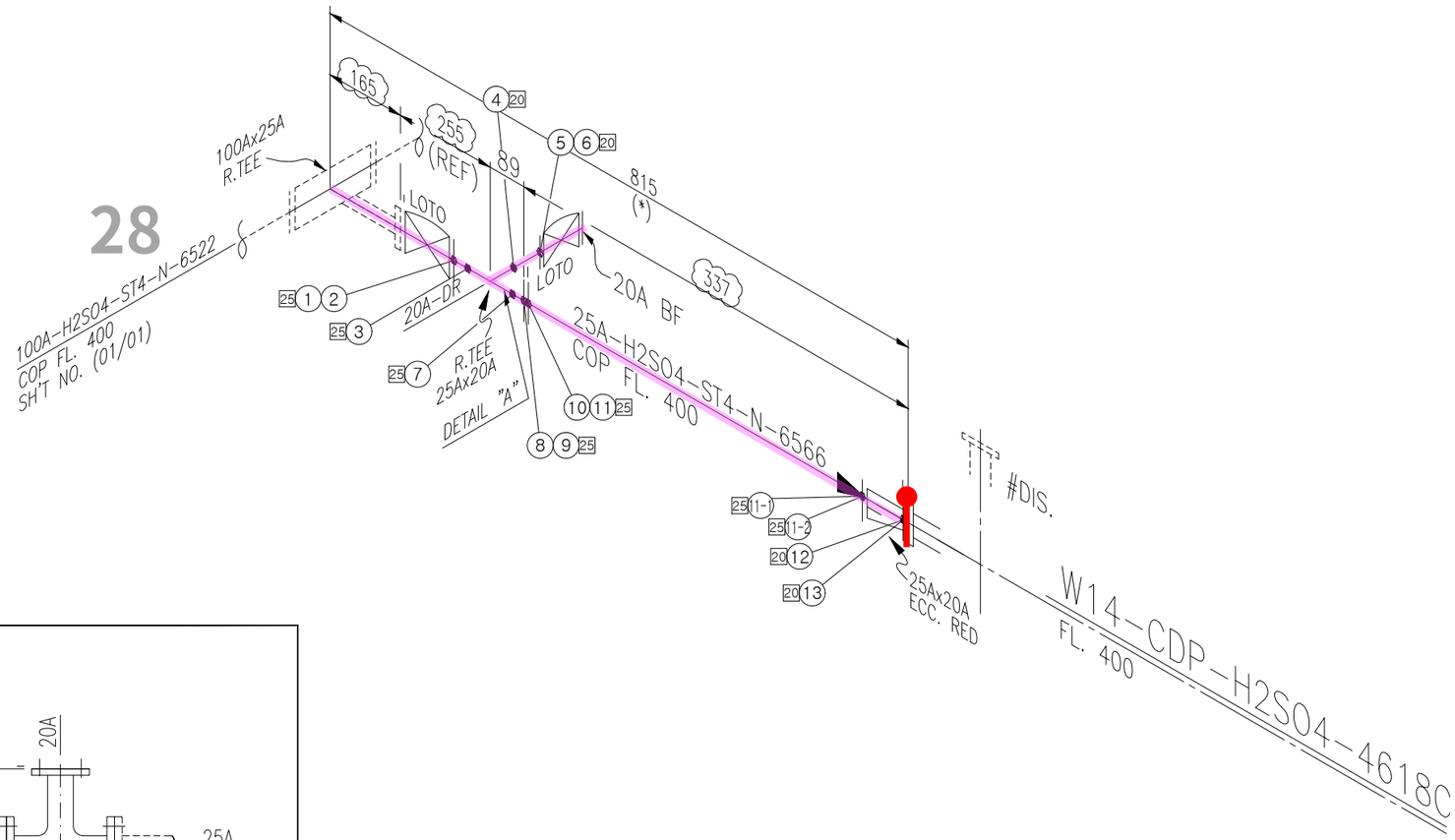

DETAIL "A"

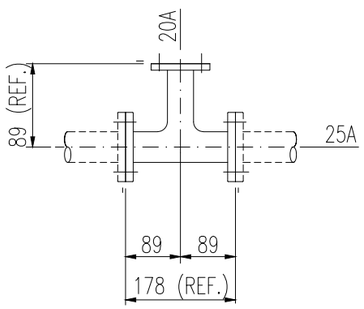

25Ax20A R.TEE W/ PTFE-LINED

상기 25Ax20A R.TEE 는 FLANGE 포함 VENDOR 공급품임.

<NOTE>
1. TRAY & ANGLE,CHANNEL SUPPORT가 적용되는 배관 ELEVATION은 현장 맞춤으로 한다.
2. (*) FIELD ADJUST

SK ecoplant

ITEM	SIZE	Q'TY	DESCRIPTION
		ST4	
P	25A	0.4M	PIPE, STS 304TP+PTFE Lined, ERW – SCH 10S
TR	25Ax20A	1EA	TEE RED, STSF304+PTFE Lined, ERW – SCH 10S
VDLO	25A	1EA	KS 10K, RF, Teflon Lined SSC13, EPDM + PTFE Diaphragm, BB, HW
			+LOTO
VDLO	20A	1EA	KS 10K, RF, Teflon Lined SSC13, EPDM + PTFE Diaphragm, BB, HW
			+LOTO
F	25A	4EA	FLG , KS 10K, RF, STS304+PTFE Lined
FB	20A	1EA	FLG BLIND, KS 10K, RF, STS304+PTFE Lined
G	25A	4EA	GASKET, KS 10K, RF, PTFE, 3.0MM TH'K
G	20A	2EA	GASKET, KS 10K, RF, PTFE, 3.0MM TH'K
B1	25A	4SET	MACHINE BOLT & NYLON NUTS :STS 304 / W WASHERS
B1	20A	2SET	MACHINE BOLT & NYLON NUTS :STS 304 / W WASHERS
SH	25A	4EA	SHIELD
SH	20A	2EA	SHIELD
F	20A	1EA	FLG , KS 10K, RF, STS304+PTFE Lined
RE	25Ax20A	1EA	ECC. RED, STSF304+PTFE Lined, ERW – SCH 10S

* PIPE : P/P1 * 90° ELBOW : E90 * 45° ELBOW : E45 * TEE : T * RED.TEE : TR * STUB-IN : STU * REINFORCING PAD : RP * CON.RED : RC * ECC.RED : RE * CON.SWAGE : RCS/RCS1 * ECC.SWAGE : RES/RES1 * NIPPLE : NP/NP1/NP2 * CAP : CAP/CAP1 * PLUG : PLG * FULL COUPLING : FC * HALF COUPLING : HF/HF1
* STUB-IN : STU * SOCKET(HDPE/PVC) : SC * SADDLE(HDPE) : SD * FLANGE : F/F1 * GASKET : G/G1/G2 * BOLT & NUT : B/B1 * BLIND FLANGE : FB/FB1 * GATE VA. : VG/VG1/VG2 * BALL VA. : VB/VBLO/VB1/VB1LO/VB2/VB2LO * BUTTERFLY VA. : VF/VF4 * CHECK VA. : VC/VC1/VC2/VC3/VC4/VC5/VC6/VC7
* GLOBE VA. : VL/VL1/VL2 * DIAPHRAGM VA. : VD/VDLO * DAMPER : VP * QUICK COUPLING : SQC * FLEXIBLE JOINT(STEEL) : FLXB * FLEXIBLE JOINT(RUBBER) : FLXR * FLEXIBLE JOINT(STEEL_PTFE LINED) : FLXL * FLEXIBLE HOSE : FLXH * STEAM TRAP : ST * SPRAY NOZZLE : SPN * EMERGENCY SHOWER : SSH
* STRAINER(Y-TYPE) : YSTR * STRAINER(T-TYPE) : TSTR * STRAINER(BUCKET-TYPE) : BSTR * ANCHOR PLATE : STOP * BIRD SCREEN : BS * ISOLATION KIT : IK * UNLOADING BOX : UB * AIR TRAP : AT * LOTO : LOTO * SIGHT GLASS : SG * PRESSURE GAUGE : PG * SHILED : SH * SPECIAL BOLT & NUT : BL/BL1

CLIENT SK hynix 23

INSULATION	CODE	N	CONDITION	PRESS. (kg/cm2g)	TEMP. (°C)
	THICK.	–	DESIGN	1.0	60
			OPERATING	ATM	AMB

AREA W14
UNIT 4FA
REF. PLAN DWG. CJ-M15W14-PI-A30-040013-A
REF. P & ID CJ-M15W14-PR-A20-000147

REV. NO.	DATE	DESCRIPTION	BY	CHK	APP'D
0	25.01.24	APPROVED FOR CONSTRUCTION	황래종	안남후	박동영

CONTRACTOR SK ecoplant
PROJECT NAME M15X Ph4 Project
COMMODITY H2S04
JOB NO. 22330D
LINE NO. 25A-H2S04-ST4-N-6566
SH'T NO. 01 / 01
REV. 0

경고 : 본 도면은 SK HYNIX의 기업비밀 자료로서, 어떠한 경우에도 목적 외 사용, 복제, 제3자에게 공개, 누설 및 유출할 수 없으며, 회사는 유포자의 불법 사용으로 피해가 발생할 경우 유포자에게 민/형사상 책임을 요구할 수 있음.

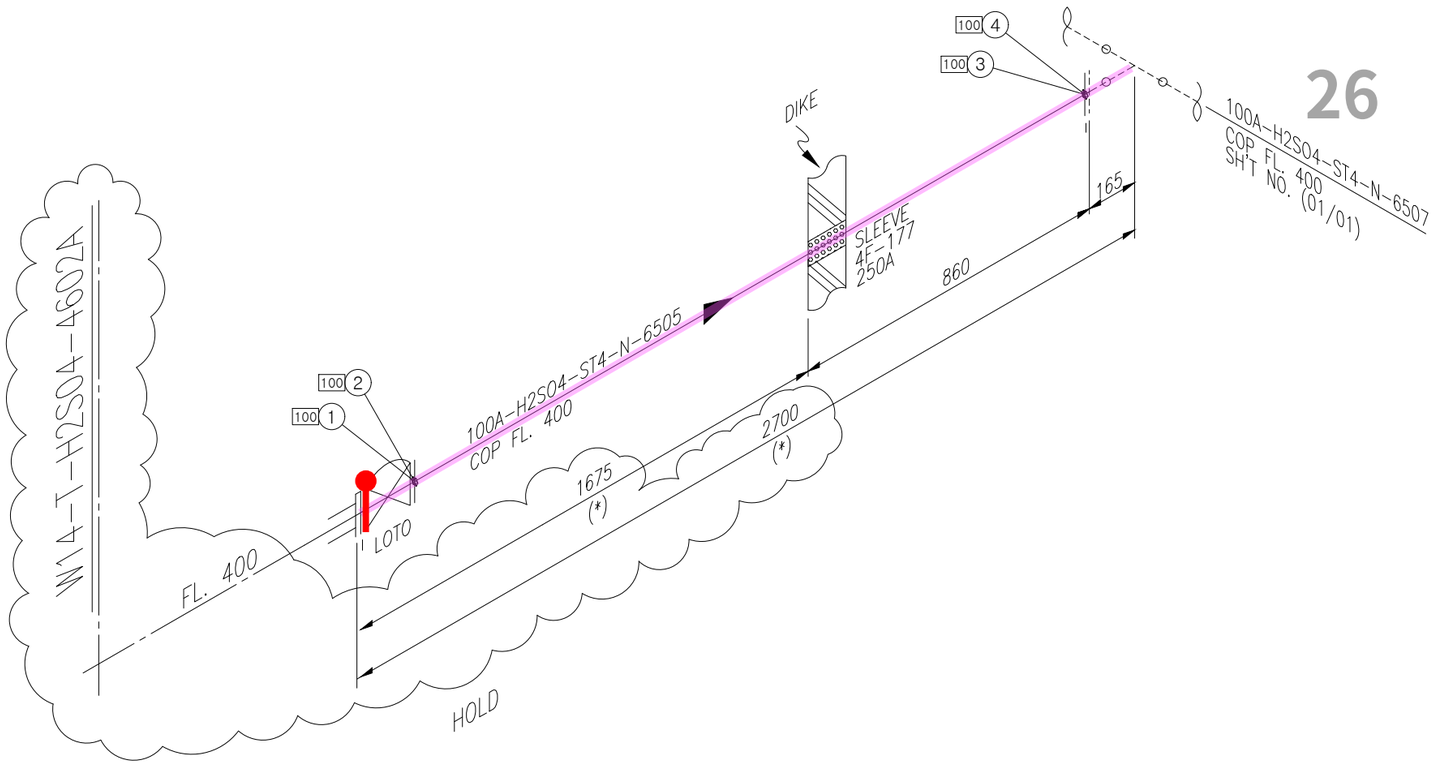

<NOTE>
1. (*) FIELD ADJUST

ITEM	SIZE	Q'TY	DESCRIPTION
		ST4	
P	100A	2.4M	PIPE, STS 304TP+PTFE Lined, ERW – SCH 10S
F	100A	2EA	FLG LAP JOINT, KS 10K, RF, STS304+PTFE Lined
G	100A	3EA	GASKET, KS 10K, RF, PTFE, 3.0MM TH'K
B1	100A	3SET	MACHINE BOLT & NYLON NUTS :STS 304 / W WASHERS
VDLO	100A	1EA	KS 10K, RF, Teflon Lined SSC13, EPDM + PTFE Diaphragm, BB, HW
			+LOTO
SH	100A	3EA	SHIELD
		ST1	

* PIPE : P/P1 * 90° ELBOW : E90 * 45° ELBOW : E45 * TEE : T * RED.TEE : TR * STUB-IN : STU * REINFORCING PAD : RP * CON.RED : RC * ECC.RED : RE * CON.SWAGE : RCS/RCS1 * ECC.SWAGE : RES/RES1 * NIPPLE : NP/NP1/NP2 * CAP : CAP/CAP1 * PLUG : PLG * FULL COUPLING : FC * HALF COUPLING : HF/HF1
* STUB-IN : STU * SOCKET(HDPE/PVC) : SC * SADDLE(HDPE) : SD * FLANGE : F/F1 * GASKET : G/G1/G2 * BOLT & NUT : B/B1 * BLIND FLANGE : FB/FB1 * GATE VA. : VG/VG1/VG2 * BALL VA. : VB/VBLO/VB1/VB1LO/VB2/VB2LO * BUTTERFLY VA. : VF/VF4 * CHECK VA. : VC/VC1/VC2/VC3/VC4/VC5/VC6/VC7
* GLOBE VA. : VL/VL1/VL2 * DIAPHRAGM VA. : VD/VDLO * DAMPER : VP * QUICK COUPLING : SQC * FLEXIBLE JOINT(STEEL) : FLXB * FLEXIBLE JOINT(RUBBER) : FLXR * FLEXIBLE JOINT(STEEL_PTFE LINED) : FLXL * FLEXIBLE HOSE : FLXH * STEAM TRAP : ST * SPRAY NOZZLE : SPN * EMERGENCY SHOWER : SSH
* STRAINER(Y-TYPE) : YSTR * STRAINER(T-TYPE) : TSTR * STRAINER(BUCKET-TYPE) : BSTR * ANCHOR PLATE : STOP * BIRD SCREEN : BS * ISOLATION KIT : IK * UNLOADING BOX : UB * AIR TRAP : AT * LOTO : LOTO * SIGHT GLASS : SG * PRESSURE GAUGE : PG * SHILED : SH * SPECIAL BOLT & NUT : BL/BL1

CLIENT SK hynix 24

INSULATION	CODE	N
	THICK.	–

CONDITION	PRESS. (kg/cm2g)	TEMP. (°C)
DESIGN	1.0	60
OPERATING	ATM	AMB

AREA W14
UNIT 4FA
REF. PLAN DWG. CJ-M15W14-PI-A30-040012-A
REF. P & ID CJ-M15W14-PR-A20-000144

REV. NO.	DATE	DESCRIPTION	BY	CHK	APP'D
0	25.01.24	APPROVED FOR CONSTRUCTION	황래종	안남후	박동영

CONTRACTOR SK ecoplant
PROJECT NAME M15X Ph4 Project
COMMODITY H2S04
JOB NO. 22330D
LINE NO. 100A-H2S04-ST4-N-6505
SH'T NO. 01 / 01
REV. 0

경고 : 본 도면은 SK HYNIX의 기업비밀 자료로서, 어떠한 경우에도 목적 외 사용, 복제, 제3자에게 공개, 누설 및 유출할 수 없으며, 회사는 유포자의 불법 사용으로 피해가 발생할 경우 유포자에게 민/형사상 책임을 요구할 수 있음.

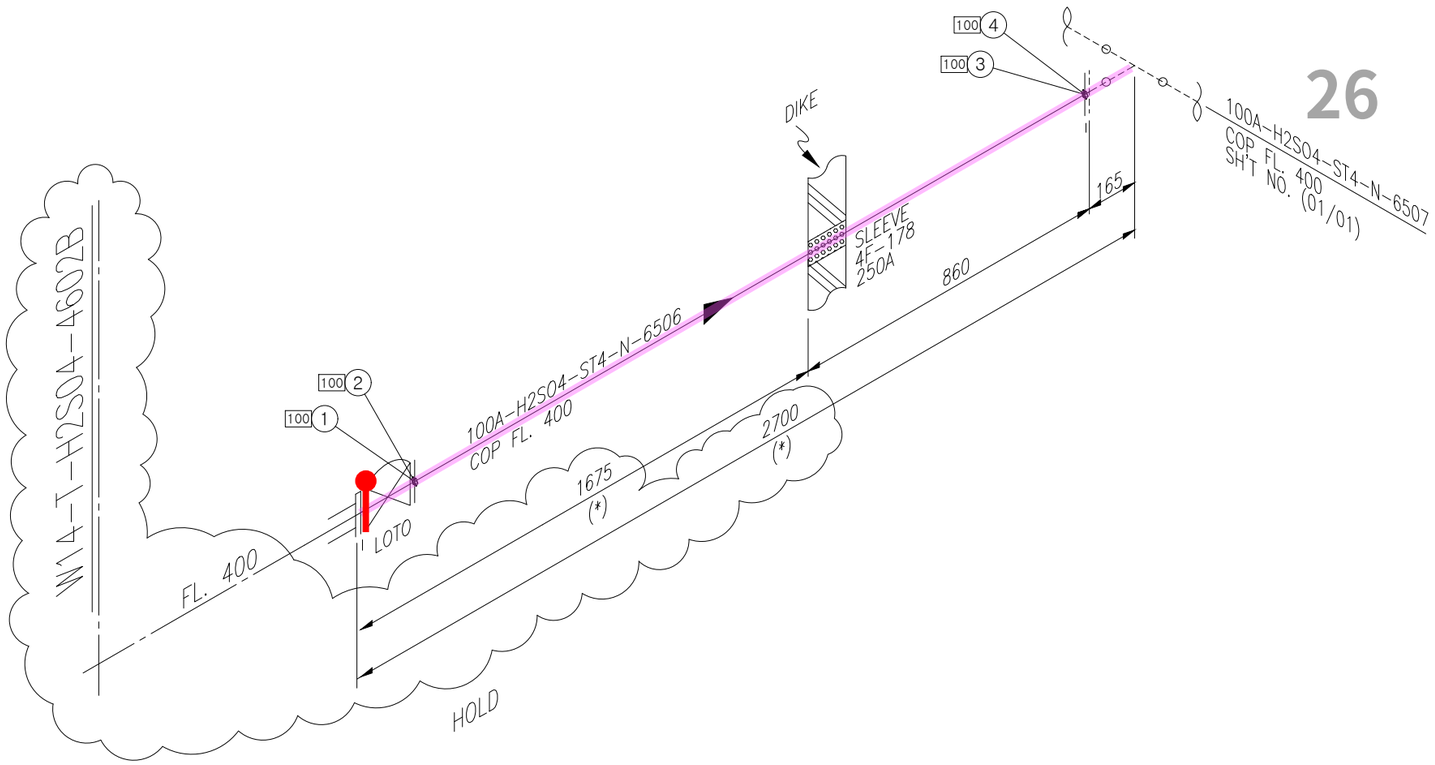

<NOTE>
1. (*) FIELD ADJUST

ITEM	SIZE	Q'TY	DESCRIPTION
		ST4	
P	100A	2.4M	PIPE, STS 304TP+PTFE Lined, ERW – SCH 10S
F	100A	2EA	FLG LAP JOINT, KS 10K, RF, STS304+PTFE Lined
G	100A	3EA	GASKET, KS 10K, RF, PTFE, 3.0MM TH'K
B1	100A	3SET	MACHINE BOLT & NYLON NUTS :STS 304 / W WASHERS
VDLO	100A	1EA	KS 10K, RF, Teflon Lined SSC13, EPDM + PTFE Diaphragm, BB, HW
			+LOTO
SH	100A	3EA	SHIELD
		ST1	

* PIPE : P/P1 * 90° ELBOW : E90 * 45° ELBOW : E45 * TEE : T * RED.TEE : TR * STUB-IN : STU * REINFORCING PAD : RP * CON.RED : RC * ECC.RED : RE * CON.SWAGE : RCS/RCS1 * ECC.SWAGE : RES/RES1 * NIPPLE : NP/NP1/NP2 * CAP : CAP/CAP1 * PLUG : PLG * FULL COUPLING : FC * HALF COUPLING : HF/HF1
* STUB-IN : STU * SOCKET(HDPE/PVC) : SC * SADDLE(HDPE) : SD * FLANGE : F/F1 * GASKET : G/G1/G2 * BOLT & NUT : B/B1 * BLIND FLANGE : FB/FB1 * GATE VA. : VG/VG1/VG2 * BALL VA. : VB/VBLO/VB1/VB1LO/VB2/VB2LO * BUTTERFLY VA. : VF/VF4 * CHECK VA. : VC/VC1/VC2/VC3/VC4/VC5/VC6/VC7
* GLOBE VA. : VL/VL1/VL2 * DIAPHRAGM VA. : VD/VDLO * DAMPER : VP * QUICK COUPLING : SQC * FLEXIBLE JOINT(STEEL) : FLXB * FLEXIBLE JOINT(RUBBER) : FLXR * FLEXIBLE JOINT(STEEL_PTFE LINED) : FLXL * FLEXIBLE HOSE : FLXH * STEAM TRAP : ST * SPRAY NOZZLE : SPN * EMERGENCY SHOWER : SSH
* STRAINER(Y-TYPE) : YSTR * STRAINER(T-TYPE) : TSTR * STRAINER(BUCKET-TYPE) : BSTR * ANCHOR PLATE : STOP * BIRD SCREEN : BS * ISOLATION KIT : IK * UNLOADING BOX : UB * AIR TRAP : AT * LOTO : LOTO * SIGHT GLASS : SG * PRESSURE GAUGE : PG * SHILED : SH * SPECIAL BOLT & NUT : BL/BL1

CLIENT SK hynix 25

INSULATION	CODE	N
	THICK.	–

CONDITION	PRESS. (kg/cm2g)	TEMP. (°C)
DESIGN	1.0	60
OPERATING	ATM	AMB

AREA W14
UNIT 4FA
REF. PLAN DWG. CJ-M15W14-PI-A30-040013-A
REF. P & ID CJ-M15W14-PR-A20-000144

REV. NO.	DATE	DESCRIPTION	BY	CHK	APP'D
0	25.01.24	APPROVED FOR CONSTRUCTION	황래종	안남후	박동영

CONTRACTOR SK ecoplant
PROJECT NAME M15X Ph4 Project
COMMODITY H2S04
JOB NO. 22330D
LINE NO. 100A-H2S04-ST4-N-6506
SH'T NO. 01 / 01
REV. 0

경고 : 본 도면은 SK HYNIX의 기업비밀 자료로서, 어떠한 경우에도 목적 외 사용, 복제, 제3자에게 공개, 누설 및 유출할 수 없으며, 회사는 유포자의 불법 사용으로 피해가 발생할 경우 유포자에게 민/형사상 책임을 요구할 수 있음.

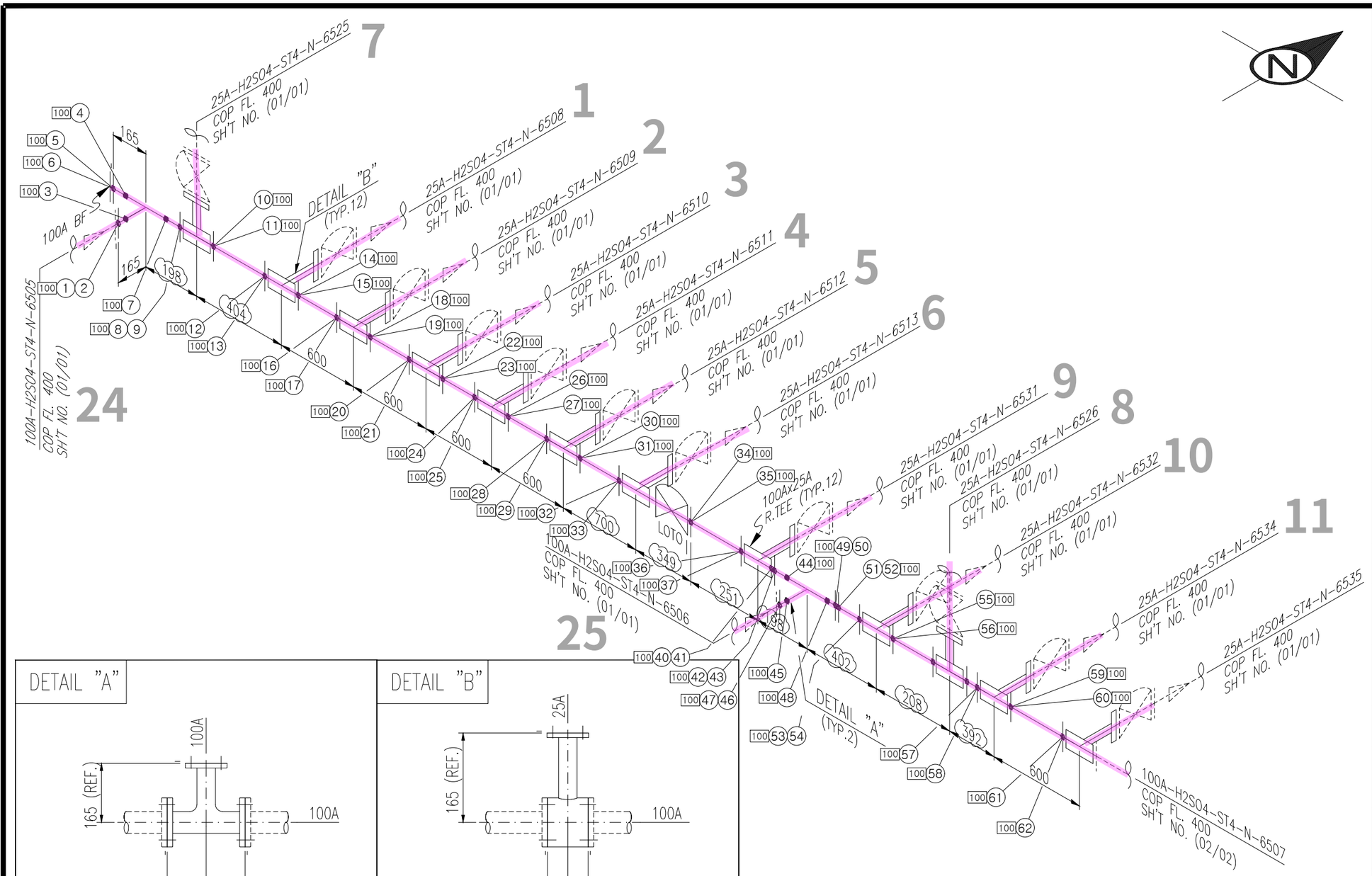

ITEM	SIZE	Q'TY	DESCRIPTION
		ST4	
P	100A	5.4M	PIPE, STS 304TP+PTFE Lined, ERW – SCH 10S
VDLO	100A	1EA	KS 10K, RF, Teflon Lined SSC13, EPDM + PTFE Diaphragm, BB, HW +LOTO
T	100A	2EA	TEE EQUAL, STSF304+PTFE Lined, ERW – SCH 10S
TR	100Ax25A	12EA	INSTRUMENT TEE, STS304TP+PTFE Lined, SCH 10S
F	100A	28EA	FLG , KS 10K, RF, STS304+PTFE Lined
FB	100A	1EA	FLG BLIND, KS 10K, RF, STS304+PTFE Lined
G	100A	26EA	GASKET, KS 10K, RF, PTFE, 3.0MM TH'K
B1	100A	2SET	MACHINE BOLT & NYLON NUTS :STS 304 / W WASHERS
BL1	100A	12SET	MACHINE BOLT & NYLON NUTS :STS 304 / W WASHERS(SPECIAL)
SH	100A	26EA	SHIELD

12

DETAIL "A"

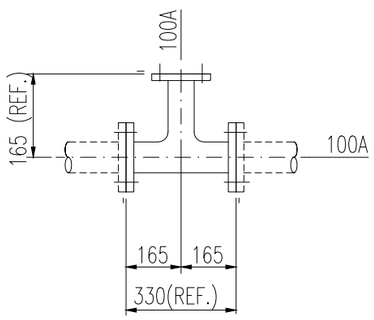

100A EQUAL TEE W/ PTFE-LINED

상기 100A EQUAL TEE 는 FLANGE 포함 VENDOR 공급품임.

DETAIL "B"

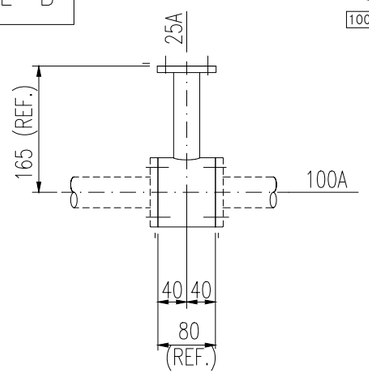

100Ax25A R.TEE W/ PTFE-LINED

상기 100Ax25A R.TEE 는 FLANGE 포함 VENDOR 공급품임.

<NOTE>
1. TRAY & ANGLE,CHANNEL SUPPORT가 적용되는 배관 ELEVATION은 현장 맞춤으로 한다.
2. (*) FIELD ADJUST

* PIPE : P/P1 * 90° ELBOW : E90 * 45° ELBOW : E45 * TEE : T * RED.TEE : TR * STUB-IN : STU * REINFORCING PAD : RP * CON.RED : RC * ECC.RED : RE * CON.SWAGE : RCS/RCS1 * ECC.SWAGE : RES/RES1 * NIPPLE : NP/NP1/NP2 * CAP : CAP/CAP1 * PLUG : PLG * FULL COUPLING : FC * HALF COUPLING : HF/HF1
* STUB-IN : STU * SOCKET(HDPE/PVC) : SC * SADDLE(HDPE) : SD * FLANGE : F/F1 * GASKET : G/G1/G2 * BOLT & NUT : B/B1 * BLIND FLANGE : FB/FB1 * GATE VA. : VG/VG1/VG2 * BALL VA. : VB/VBLO/VB1/VB1LO/VB2/VB2LO * BUTTERFLY VA. : VF/VF4 * CHECK VA. : VC/VC1/VC2/VC3/VC4/VC5/VC6/VC7
* GLOBE VA. : VL/VL1/VL2 * DIAPHRAGM VA. : VD/VDLO * DAMPER : VP * QUICK COUPLING : SQC * FLEXIBLE JOINT(STEEL) : FLXB * FLEXIBLE JOINT(RUBBER) : FLXR * FLEXIBLE JOINT(STEEL_PTFE LINED) : FLXL * FLEXIBLE HOSE : FLXH * STEAM TRAP : ST * SPRAY NOZZLE : SPN * EMERGENCY SHOWER : SSH
* STRAINER(Y-TYPE) : YSTR * STRAINER(T-TYPE) : TSTR * STRAINER(BUCKET-TYPE) : BSTR * ANCHOR PLATE : STOP * BIRD SCREEN : BS * ISOLATION KIT : IK * UNLOADING BOX : UB * AIR TRAP : AT * LOTO : LOTO * SIGHT GLASS : SG * PRESSURE GAUGE : PG * SHILED : SH * SPECIAL BOLT & NUT : BL/BL1

CLIENT SK hynix

26

INSULATION	CODE	N	CONDITION	PRESS. (kg/cm2g)	TEMP. (°C)
	THICK.	–	DESIGN	1.0	60
			OPERATING	ATM	AMB

AREA W14
UNIT 4FA
REF. PLAN DWG. CJ-M15W14-PI-A30-040013-A
REF. P & ID CJ-M15W14-PR-A20-000145

REV. NO.	DATE	DESCRIPTION	BY	CHK	APP'D
0	25.01.24	APPROVED FOR CONSTRUCTION	황래종	안남후	박동영

CONTRACTOR SK ecoplant
PROJECT NAME M15X Ph4 Project
COMMODITY H2SO4
JOB NO. 22330D
LINE NO. 100A-H2SO4-ST4-N-6507
SH'T NO. 01 / 02
REV. 0

경고 : 본 도면은 SK HYNIX의 기업비밀 자료로서, 어떠한 경우에도 목적 외 사용, 복제, 제3자에게 공개, 누설 및 유출할 수 없으며, 회사는 유포자의 불법 사용으로 피해가 발생할 경우 유포자에게 민/형사상 책임을 요구할 수 있음.

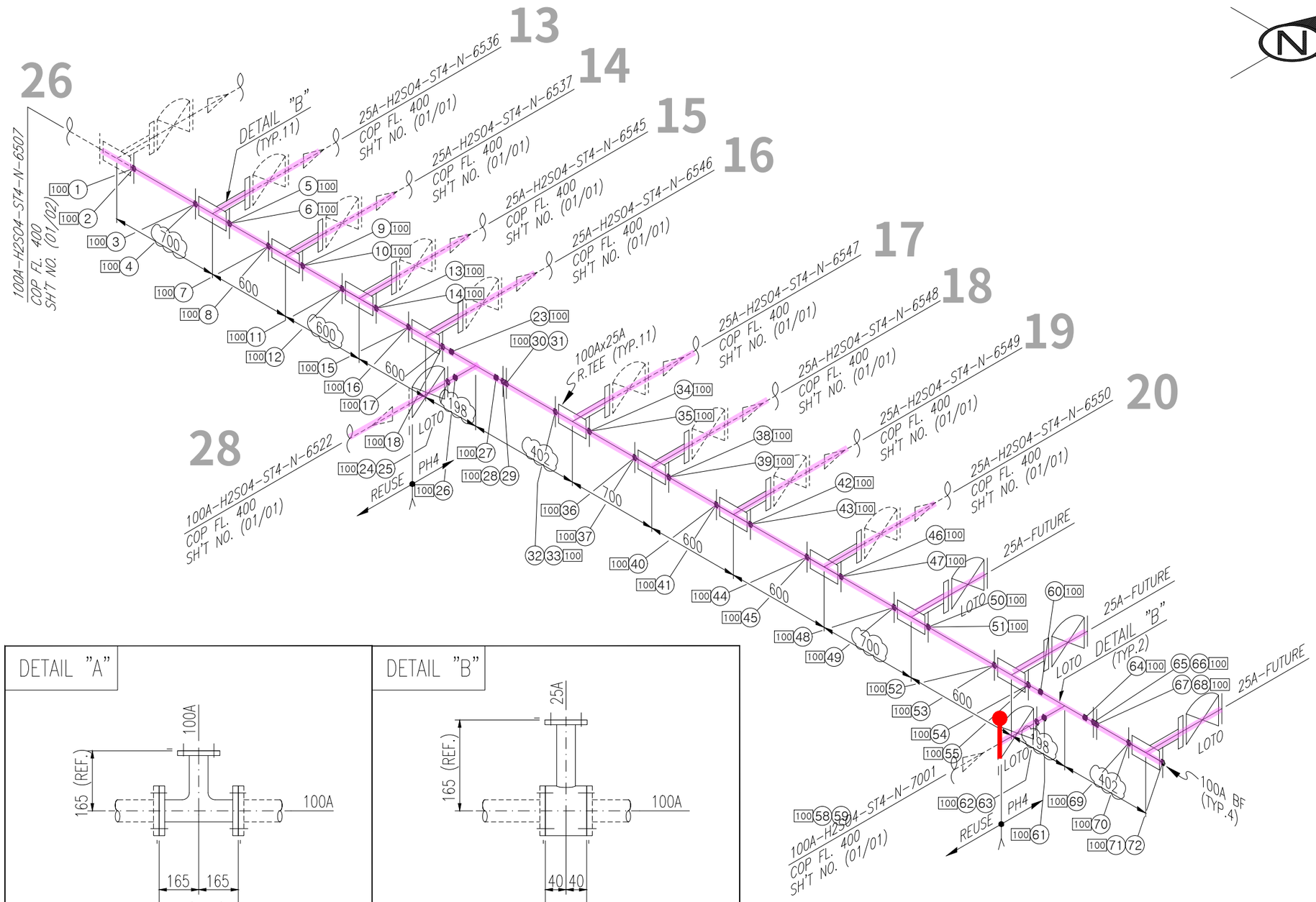

DETAIL "A"

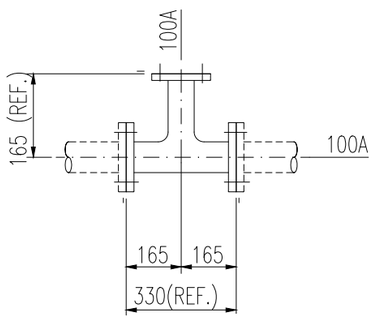

100A EQUAL TEE W/ PTFE-LINED

상기 100A EQUAL TEE 는 FLANGE 포함 VENDOR 공급품임.

DETAIL "B"

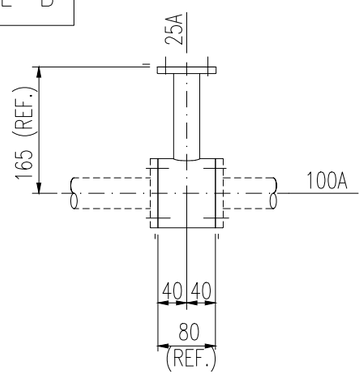

100Ax25A R.TEE W/ PTFE-LINED

상기 100Ax25A R.TEE 는 FLANGE 포함 VENDOR 공급품임.

<NOTE>
1. TRAY & ANGLE,CHANNEL SUPPORT가 적용되는 배관 ELEVATION은 현장 맞춤으로 한다.
2. (*) FIELD ADJUST

SK ecoplant

ITEM	SIZE	Q'TY	DESCRIPTION
		ST4	
P	100A	6.5M	PIPE, STS 304TP+PTFE Lined, ERW – SCH 10S
VDLO	100A	2EA	KS 10K, RF, Teflon Lined SSC13, EPDM + PTFE Diaphragm, BB, HW
			+LOTO
VDLO	25A	3EA	KS 10K, RF, Teflon Lined SSC13, EPDM + PTFE Diaphragm, BB, HW
			+LOTO
T	100A	2EA	TEE EQUAL, STSF304+PTFE Lined, ERW – SCH 10S
TI	100Ax25A	11EA	INSTRUMENT TEE, STS304TP+PTFE Lined, SCH 10S
F	100A	34EA	FLG , KS 10K, RF, STS304+PTFE Lined
FB	100A	1EA	FLG BLIND, KS 10K, RF, STS304+PTFE Lined
FB	25A	3EA	FLG BLIND, KS 10K, RF, STS304+PTFE Lined
G	100A	30EA	GASKET, KS 10K, RF, PTFE, 3.0MM TH'K
G	25A	6EA	GASKET, KS 10K, RF, PTFE, 3.0MM TH'K
B1	100A	7SET	MACHINE BOLT & NYLON NUTS :STS 304 / W WASHERS
BL1	100A	11SET	MACHINE BOLT & NYLON NUTS :STS 304 / W WASHERS(SPECIAL)
SH	100A	30EA	SHIELD
SH	25A	6EA	SHIELD

* PIPE : P/P1 * 90° ELBOW : E90 * 45° ELBOW : E45 * TEE : T * RED.TEE : TR * STUB-IN : STU * REINFORCING PAD : RP * CON.RED : RC * ECC.RED : RE * CON.SWAGE : RCS/RCS1 * ECC.SWAGE : RES/RES1 * NIPPLE : NP/NP1/NP2 * CAP : CAP/CAP1 * PLUG : PLG * FULL COUPLING : FC * HALF COUPLING : HF/HF1
* STUB-IN : STU * SOCKET(HDPE/PVC) : SC * SADDLE(HDPE) : SD * FLANGE : F/F1 * GASKET : G/G1/G2 * BOLT & NUT : B/B1 * BLIND FLANGE : FB/FB1 * GATE VA. : VG/VG1/VG2 * BALL VA. : VB/VBLO/VB1/VB1LO/VB2/VB2LO * BUTTERFLY VA. : VF/VF4 * CHECK VA. : VC/VC1/VC2/VC3/VC4/VC5/VC6/VC7
* GLOBE VA. : VL/VL1/VL2 * DIAPHRAGM VA. : VD/VDLO * DAMPER : VP * QUICK COUPLING : SQC * FLEXIBLE JOINT(STEEL) : FLXB * FLEXIBLE JOINT(RUBBER) : FLXR * FLEXIBLE JOINT(STEEL_PTFE LINED) : FLXL * FLEXIBLE HOSE : FLXH * STEAM TRAP : ST * SPRAY NOZZLE : SPN * EMERGENCY SHOWER : SSH
* STRAINER(Y-TYPE) : YSTR * STRAINER(T-TYPE) : TSTR * STRAINER(BUCKET-TYPE) : BSTR * ANCHOR PLATE : STOP * BIRD SCREEN : BS * ISOLATION KIT : IK * UNLOADING BOX : UB * AIR TRAP : AT * LOTO : LOTO * SIGHT GLASS : SG * PRESSURE GAUGE : PG * SHILED : SH * SPECIAL BOLT & NUT : BL/BL1

CLIENT SK hynix 27

INSULATION	CODE	N	CONDITION	PRESS. (kg/cm2g)	TEMP. (°C)
	THICK.	–	DESIGN	1.0	60
			OPERATING	ATM	AMB

AREA W14
UNIT 4FA
REF. PLAN DWG. CJ-M15W14-PI-A30-040013-A
REF. P & ID CJ-M15W14-PR-A20-000145

REV. NO.	DATE	DESCRIPTION	BY	CHK	APP'D
0	25.01.24	APPROVED FOR CONSTRUCTION	황래종	안남후	박동영

CONTRACTOR SK ecoplant
PROJECT NAME M15X Ph4 Project
COMMODITY H2SO4
JOB NO. 22330D
LINE NO. 100A-H2SO4-ST4-N-6507
SH'T NO. 02 / 02
REV. 0

경고 : 본 도면은 SK HYNIX의 기업비밀 자료로서, 어떠한 경우에도 목적 외 사용, 복제, 제3자에게 공개, 누설 및 유출할 수 없으며, 회사는 유포자의 불법 사용으로 피해가 발생할 경우 유포자에게 민/형사상 책임을 요구할 수 있음.

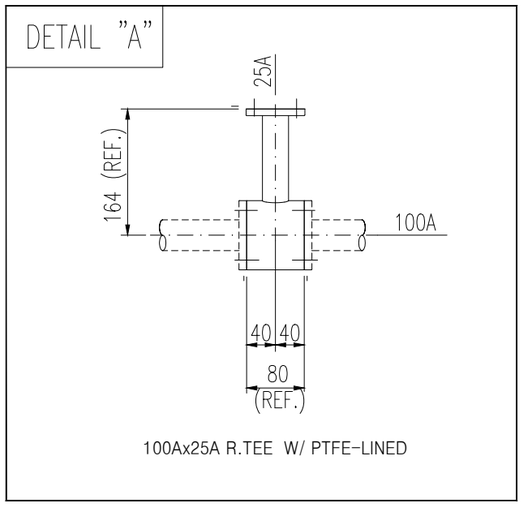

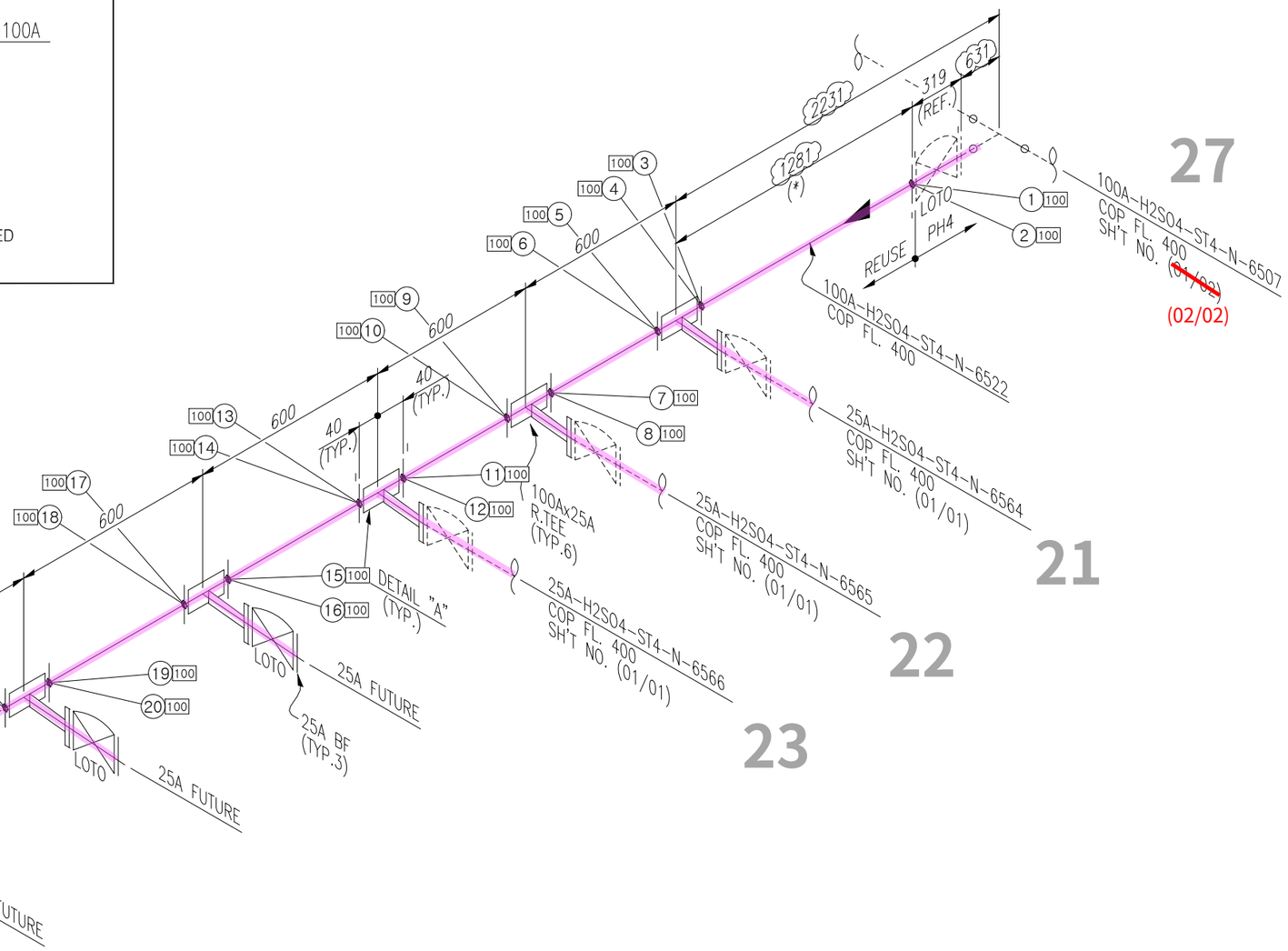

<NOTE>
1. TRAY & ANGLE,CHANNEL SUPPORT가 적용되는
배관 ELEVATION은 현장 맞춤으로 한다.
2. (*) FIELD ADJUST

SK ecoplant

ITEM	SIZE	Q'TY	DESCRIPTION
		ST4	
P	100A	4.2M	PIPE, STS 304TP+PTFE Lined, ERW – SCH 10S
TI	100Ax25A	6EA	INSTRUMENT TEE, STSF304+PTFE Lined, ERW – SCH 10S
F	100A	12EA	FLG , KS 10K, RF, STS304+PTFE Lined
FB	100A	1EA	FLG BLIND, KS 10K, RF, STS304+PTFE Lined
FB	25A	3EA	FLG BLIND, KS 10K, RF, STS304+PTFE Lined
G	100A	13EA	GASKET, KS 10K, RF, PTFE, 3.0MM TH'K
G	25A	6EA	GASKET, KS 10K, RF, PTFE, 3.0MM TH'K
B1	100A	1SET	MACHINE BOLT & NYLON NUTS :STS 304 / W WASHERS
B1	25A	6SET	MACHINE BOLT & NYLON NUTS :STS 304 / W WASHERS
BL1	100A	6SET	MACHINE BOLT & NYLON NUTS :STS 304 / W WASHERS(SPECIAL)
VBLO	25A	3EA	BALL VALVE, KS 10K, RF FLG'D, BODY-Teflon Lined SSC13 /
			TRIM-Teflon Lined SSC13 / SEAT-PTFE, FB, LEVER+LOTO
SH	100A	13EA	SHIELD
SH	25A	6EA	SHIELD

* PIPE : P/P1 * 90° ELBOW : E90 * 45° ELBOW : E45 * TEE : T * RED.TEE : TR * STUB-IN : STU * REINFORCING PAD : RP * CON.RED : RC * ECC.RED : RE * CON.SWAGE : RCS/RCS1 * ECC.SWAGE : RES/RES1 * NIPPLE : NP/NP1/NP2 * CAP : CAP/CAP1 * PLUG : PLG * FULL COUPLING : FC * HALF COUPLING : HF/HF1
* STUB-IN : STU * SOCKET(HDPE/PVC) : SC * SADDLE(HDPE) : SD * FLANGE : F/F1 * GASKET : G/G1/G2 * BOLT & NUT : B/B1 * BLIND FLANGE : FB/FB1 * GATE VA. : VG/VG1/VG2 * BALL VA. : VB/VBLO/VB1/VB1LO/VB2/VB2LO * BUTTERFLY VA. : VF/VF4 * CHECK VA. : VC/VC1/VC2/VC3/VC4/VC5/VC6/VC7
* GLOBE VA. : VL/VL1/VL2 * DIAPHRAGM VA. : VD/VDLO * DAMPER : VP * QUICK COUPLING : SQC * FLEXIBLE JOINT(STEEL) : FLXB * FLEXIBLE JOINT(RUBBER) : FLXR * FLEXIBLE JOINT(STEEL_PTFE LINED) : FLXL * FLEXIBLE HOSE : FLXH * STEAM TRAP : ST * SPRAY NOZZLE : SPN * EMERGENCY SHOWER : SSH
* STRAINER(Y-TYPE) : YSTR * STRAINER(T-TYPE) : TSTR * STRAINER(BUCKET-TYPE) : BSTR * ANCHOR PLATE : STOP * BIRD SCREEN : BS * ISOLATION KIT : IK * UNLOADING BOX : UB * AIR TRAP : AT * LOTO : LOTO * SIGHT GLASS : SG * PRESSURE GAUGE : PG * SHILED : SH * SPECIAL BOLT & NUT : BL/BL1

CLIENT SK hynix 28

INSULATION	CODE	N	CONDITION	PRESS. (kg/cm2g)	TEMP. (°C)
	THICK.	–	DESIGN	1.0	60
			OPERATING	ATM	AMB

AREA W14
UNIT 4FA
REF. PLAN DWG. CJ-M15W14-PI-A30-040013-A
REF. P & ID CJ-M15W14-PR-A20-000147

REV. NO.	DATE	DESCRIPTION	BY	CHK	APP'D
0	25.01.24	APPROVED FOR CONSTRUCTION	황래종	안남후	박동영

CONTRACTOR SK ecoplant
PROJECT NAME M15X Ph4 Project
COMMODITY H2S04
JOB NO. 22330D
LINE NO. 100A-H2S04-ST4-N-6522
SH'T NO. 01 / 01
REV. 0

경고 : 본 도면은 SK HYNIX의 기업비밀 자료로서, 어떠한 경우에도 목적 외 사용, 복제, 제3자에게 공개, 누설 및 유출할 수 없으며, 회사는 유포자의 불법 사용으로 피해가 발생할 경우 유포자에게 민/형사상 책임을 요구할 수 있음.